< Wróć

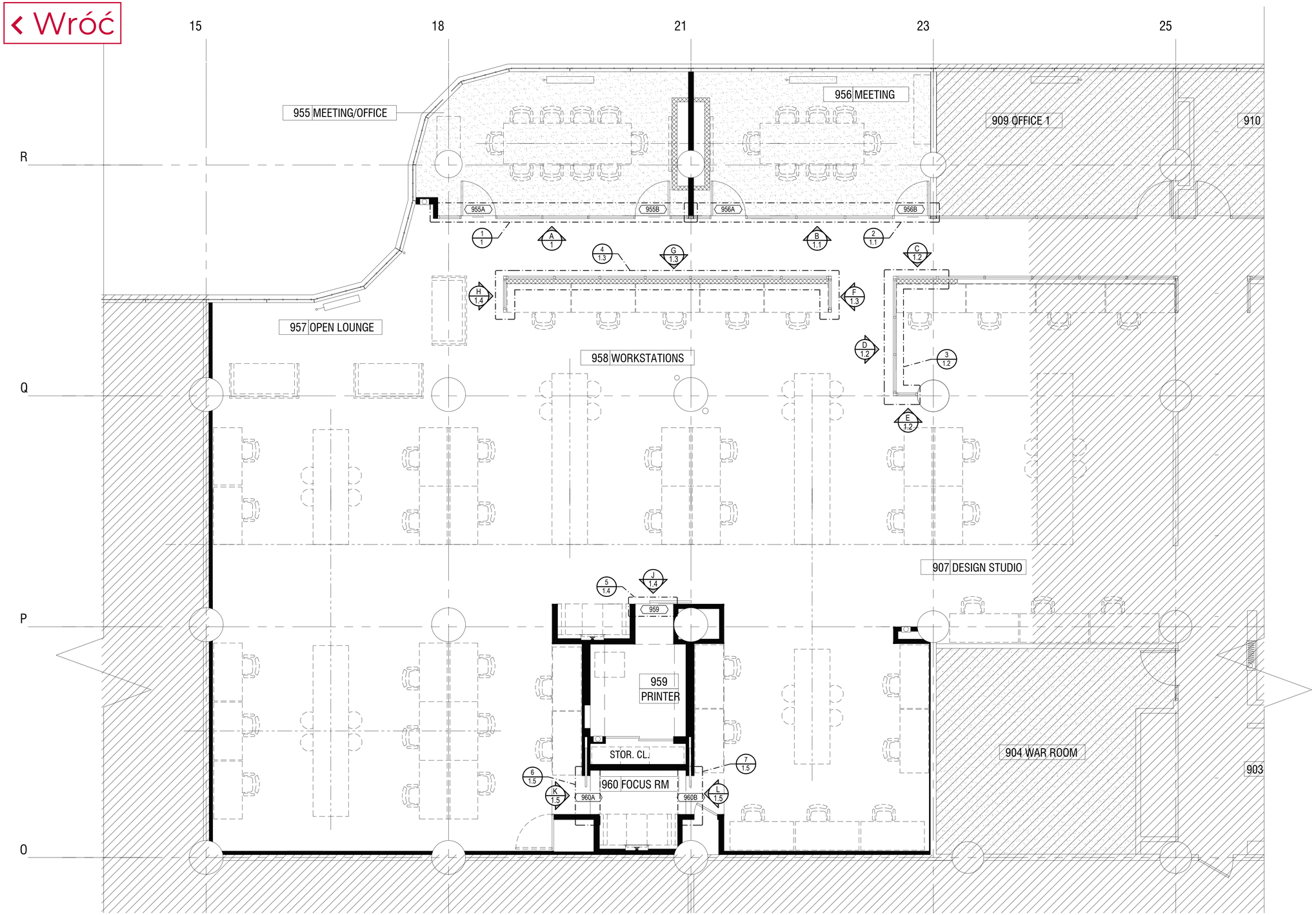

KP / KP KEY PLAN @ 9th Floor

SCALE: 1/4"=1'-0" REF: 1/A-110.00

☐ LEED ☐ FSC ☐ NAUF ☐ FIRE RATED

MATERIAL DESCRIPTIONS:

FINISH / WOOD SPECIES:	
F1	Blackened Acid Dip Finish Per Approved Sample
F2	Black
-	-
-	-
-	-
-	-

CORES / SUBSTRATES:	
C10A	1/8" HDF
C12G	11/16" PARTICLEBOARD
C12E	1/2" PARTICLEBOARD
C12H	3/4" PARTICLEBOARD
C12J	1" PARTICLEBOARD
C19E	1/2" PLYWOOD
-	-
-	-
-	-
-	-
-	-
-	-

SOLID HARDWOOD:	
-	-
-	-
-	-

DOOR SLAB ASSEMBLY:	
DS1	Metal Framed 1-3/4" Door with 1/2" Glass Light
DS2	Metal Framed 1-3/4" Sliding Door with 3/8" Glass Light
DS3	Metal Framed 2" Sliding Door with 3/8" Glass Light
-	-
-	-

OTHER MATERIAL (GLASS, STONE, METAL):	
M1	1/16" x 3/8" Black Foam Tape
M2	1/2" Clear Tempered Glass (Polished edges, & VHB Tape)
M3	20 Gauge Aluminum Panel Insert
M4	3/8" Clear Tempered Glass (Polished edges, & VHB Tape)
M9	1/32" x 1/2" 3M Clear VHB Tape
M10	1/4" Wide 3M Clear VHB Tape, 40mil Thick
M11	3M Dusted Crystal Film
M12	Rubber Glazing Gasket- Black
M13	1-1/4"x 3" Aluminum Tube Extrusion
M14	1/2" x 1/2"x 1/8" Aluminum Angle
M15	3/4" x 3/4"x 1/8" Aluminum Angle
M19	3"x 3 x 1/8" Aluminum Sq.Tube
M20	1/16" x 1/4" Clear VHB Tape
M21	1" x 1/2" "T" Metal Bar
M22	1" x 3/4" "T" Metal Bar
M23	1-3/4"x 6" Aluminum Tube Extrusion
-	-
-	-
-	-
-	-

HARDWARE:		FINISH:	QTY:
HS	See Door Hardware Schedule	-	-
-	-	-	-
-	-	-	-
-	-	-	-
-	-	-	-
-	-	-	-
-	-	-	-

BY OTHERS / EXCLUSIONS:			
E1	Slab	-	-
E2	Finished Floor	-	-
E3	Finished Wall	-	-
E4	Finished Ceiling	-	-

DATE:	ISSUED FOR:	BY:
6.21.19	Submittal	PD
-	-	-
-	-	-
-	-	-
-	-	-

VERDE

Demountable Wood & Glass Partition System
20 Haynes Court
Ronkonkoma, NY 11779
Tel: 631.981.2000 Fax: 631.981.2002

ARCHITECT:
Ampersand Architecture
648 Broadway, Suite 912
New York, NY 10012
t: 212.777.1276

CONTRACTOR:
-
-
-
-

PROJECT:
OXO
601 West 26th Street
New York, NY 10001
9th Floor

DRAWING TITLE:
VERDE Industrial System
Key Plan @ 9th Floor

DRAWN BY:	CHECKED BY:	SCALE:	DATE:
PD	-	AS NOTED	6.21.19

JOB NUMBER: VJ19072C

ITEM NUMBER: KP

JOB Barcode:

DRAWING NO. KP

METAL | MDF | PARTICLE BOARD

DOOR SCHEDULE

< Wróć

			DOOR TYPE INFORMATION				FIELD DIMENSIONS							J.O.				Leaf Info											
			Drawing #	Fire Rating	Hardware Set #	Door Swing	Wall Thickness	Fin. Floor Thickness	Slab to BM	Curtainwall / Ceilling to BM	BM to Under Side of Header	F.O. Width	F.O. Height	Width	Height	Wood Species	Finish	Under Cut	Quantity	Thickness	Width	Height	Wood Species	Finish	Slab Release Date	Jamb/ Header Release Date	Notes	Door #
9th Floor																													
1	955A	52	1			LH					-			36	111 7/8	M13	F1	1/2	1	1 3/4	35 5/8	111 3/16	DS1	F1				955A
1	955B	52	1			RH					-			36	111 7/8	M13	F1	1/2	1	1 3/4	35 5/8	111 3/16	DS1	F1				955B
1	956A	52	1.1			LH					-			36	111 7/8	M13	F1	1/2	1	1 3/4	35 5/8	111 3/16	DS1	F1				956A
1	955B	52	1.1			RH					-			36	111 7/8	M13	F1	1/2	1	1 3/4	35 5/8	111 3/16	DS1	F1				955B
1	959	75	1.4			SLIDING LH					-			40	90	-	-	1/2	1	2	42	90 3/4	DS4	F1				959
1	960A	72	1.5			SLIDING LH					-			40	90	-	-	1/2	1	1 3/4	41 1/4	88 7/8	DS2	F1				960A
1	960B	72	1.5			SLIDING RH					-			40	90	-	-	1/2	1	1 3/4	41 1/4	88 7/8	DS2	F1				960B

ARCHITECT PLEASE VERIFY UNDERCUT

METAL | MDF | PARTICLE BOARD

☐ LEED ☐ FSC ☐ NAUF ☐ FIRE RATED

MATERIAL DESCRIPTIONS:

FINISH / WOOD SPECIES:	
F1	Blackened Acid Dip Finish Per Approved Sample
F2	Black
-	-
-	-
-	-
-	-

CORES / SUBSTRATES:	
C10A	1/8" HDF
C12G	11/16" PARTICLEBOARD
C12E	1/2" PARTICLEBOARD
C12H	3/4" PARTICLEBOARD
C12J	1" PARTICLEBOARD
C19E	1/2" PLYWOOD
-	-
-	-
-	-
-	-
-	-
-	-

SOLID HARDWOOD:	
-	-
-	-
-	-

DOOR SLAB ASSEMBLY:	
DS1	Metal Framed 1-3/4" Door with 1/2" Glass Light
DS2	Metal Framed 1-3/4" Sliding Door with 3/8" Glass Light
DS3	Metal Framed 2" Sliding Door with 3/8" Glass Light
-	-
-	-

OTHER MATERIAL (GLASS, STONE, METAL):	
M1	1/16" x 3/8" Black Foam Tape
M2	1/2" Clear Tempered Glass (Polished edges, & VHB Tape)
M3	20 Gauge Aluminum Panel Insert
M4	3/8" Clear Tempered Glass (Polished edges, & VHB Tape)
M9	1/32" x 1/2" 3M Clear VHB Tape
M10	1/4" Wide 3M Clear VHB Tape, 40mil Thick
M11	3M Dusted Crystal Film
M12	Rubber Glazing Gasket- Black
M13	1-1/4"x 3" Aluminum Tube Extrusion
M14	1/2" x 1/2"x 1/8" Aluminum Angle
M15	3/4" x 3/4"x 1/8" Aluminum Angle
M19	3"x 3 x 1/8" Aluminum Sq.Tube
M20	1/16" x 1/4" Clear VHB Tape
M21	1" x 1/2" "T" Metal Bar
M22	1" x 3/4" "T" Metal Bar
M23	1-3/4"x 6" Aluminum Tube Extrusion
-	-
-	-
-	-
-	-

HARDWARE:		FINISH:	QTY:
HS	See Door Hardware Schedule	-	-
-	-	-	-
-	-	-	-
-	-	-	-
-	-	-	-
-	-	-	-
-	-	-	-

BY OTHERS / EXCLUSIONS:			
E1	Slab	-	-
E2	Finished Floor	-	-
E3	Finished Wall	-	-
E4	Finished Ceiling	-	-

DATE:	ISSUED FOR:	BY:
6.21.19	Submittal	PD
-	-	-
-	-	-
-	-	-
-	-	-

VERDE

Demountable Wood & Glass Partition System
20 Haynes Court
Ronkonkoma, NY 11779
Tel: 631.981.2000 Fax: 631.981.2002

ARCHITECT:
Ampersand Architecture
648 Broadway, Suite 912
New York, NY 10012
t: 212.777.1276

CONTRACTOR:
-
-
-
-

PROJECT:
OXO
601 West 26th Street
New York, NY 10001
9th Floor

DRAWING TITLE:
VERDE Industrial System
Door Schedule

DRAWN BY:	CHECKED BY:	SCALE:	DATE:
PD	-	AS NOTED	6.21.19

JOB NUMBER: VJ19072C

ITEM NUMBER: DS

JOB Barcode:

DRAWING NO: DS

Wróć

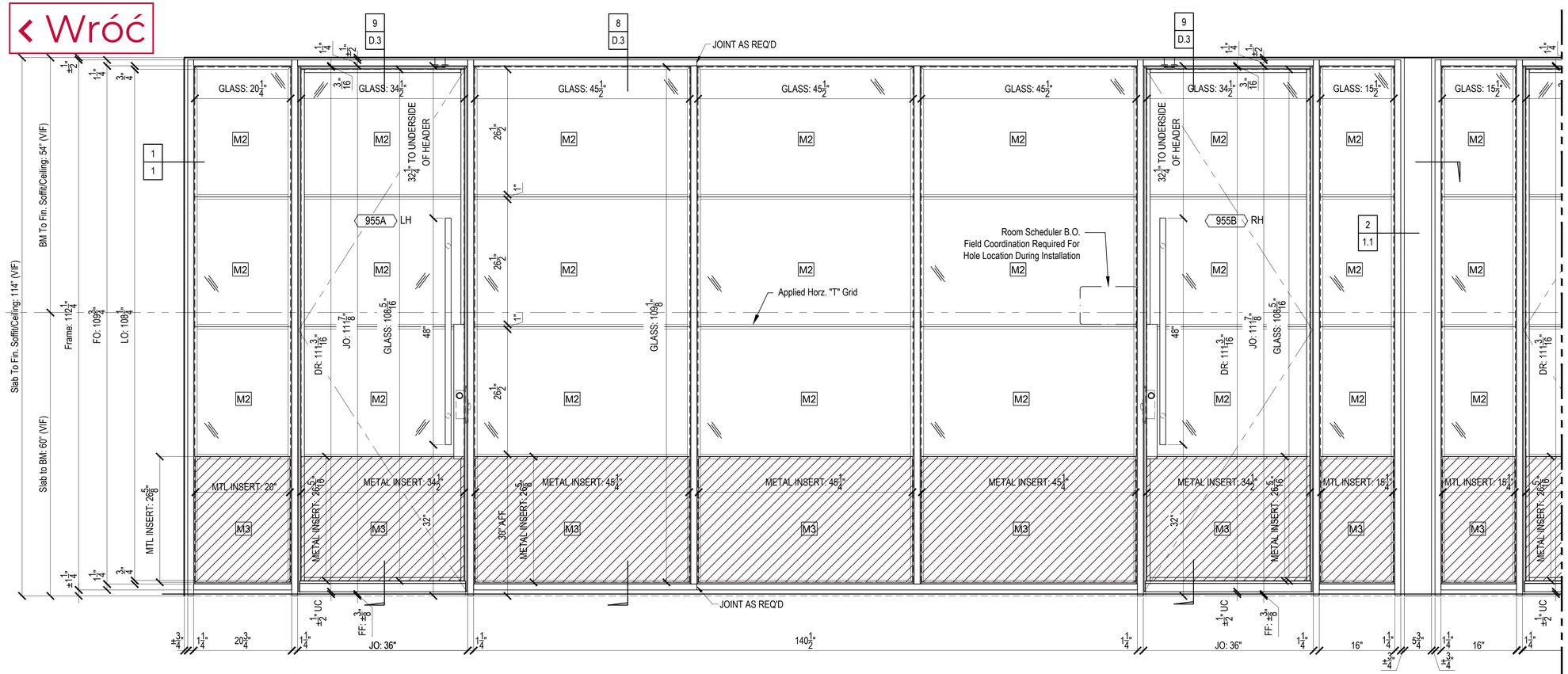

A 1 ELEVATION

SCALE: 1"=1'-0" REF: 1/A-209.00

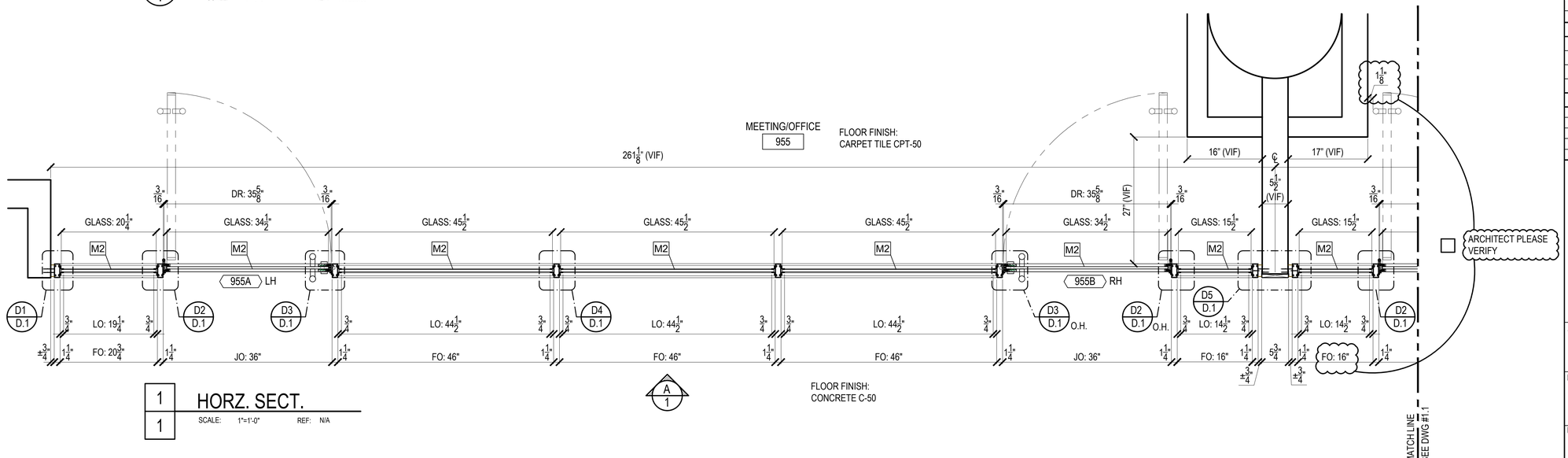

1 1 HORZ. SECT.

SCALE: 1"=1'-0" REF: N/A

	METAL		MDF		PARTICLE BOARD

☐ LEED ☐ FSC ☐ NAUF ☐ FIRE RATED

MATERIAL DESCRIPTIONS:

FINISH / WOOD SPECIES:

F1	Blackened Acid Dip Finish Per Approved Sample
F2	Black
-	-
-	-
-	-
-	-

CORES / SUBSTRATES:

C10A	1/8" HDF
C12G	11/16" PARTICLEBOARD
C12E	1/2" PARTICLEBOARD
C12H	3/4" PARTICLEBOARD
C12J	1" PARTICLEBOARD
C19E	1/2" PLYWOOD
-	-
-	-
-	-
-	-
-	-
-	-

SOLID HARDWOOD:

-	-
-	-
-	-

DOOR SLAB ASSEMBLY:

DS1	Metal Framed 1-3/4" Door with 1/2" Glass Light
DS2	Metal Framed 1-3/4" Sliding Door with 3/8" Glass Light
DS3	Metal Framed 2" Sliding Door with 3/8" Glass Light
-	-
-	-

OTHER MATERIAL (GLASS, STONE, METAL):

M1	1/16" x 3/8" Black Foam Tape
M2	1/2" Clear Tempered Glass (Polished edges, & VHB Tape)
M3	20 Gauge Aluminum Panel Insert
M4	3/8" Clear Tempered Glass (Polished edges, & VHB Tape)
M9	1/32" x 1/2" 3M Clear VHB Tape
M10	1/4" Wide 3M Clear VHB Tape, 40mil Thick
M11	3M Dusted Crystal Film
M12	Rubber Glazing Gasket- Black
M13	1-1/4"x 3" Aluminum Tube Extrusion
M14	1/2" x 1/2"x 1/8" Aluminum Angle
M15	3/4" x 3/4"x 1/8" Aluminum Angle
M19	3"x 3 x 1/8" Aluminum Sq.Tube
M20	1/16" x 1/4" Clear VHB Tape
M21	1" x 1/2" "T" Metal Bar
M22	1" x 3/4" "T" Metal Bar
M23	1-3/4"x 6" Aluminum Tube Extrusion
-	-
-	-
-	-
-	-

HARDWARE:

		FINISH:	QTY:
HS	See Door Hardware Schedule	-	-
-	-	-	-
-	-	-	-
-	-	-	-
-	-	-	-
-	-	-	-
-	-	-	-

BY OTHERS / EXCLUSIONS:

E1	Slab	-	-
E2	Finished Floor	-	-
E3	Finished Wall	-	-
E4	Finished Ceiling	-	-

DATE:	ISSUED FOR:	BY:
6.21.19	Submittal	PD
-	-	-
-	-	-
-	-	-
-	-	-

VERDE

Demountable Wood & Glass Partition System
20 Haynes Court
Ronkonkoma, NY 11779
Tel: 631.981.2000 Fax: 631.981.2002

ARCHITECT:
Ampersand Architecture
648 Broadway, Suite 912
New York, NY 10012
t: 212.777.1276

CONTRACTOR:
-
-
-
-

PROJECT: OXO
601 West 26th Street
New York, NY 10001
9th Floor

DRAWING TITLE: VERDE IndustrialSystem

DRAWN BY:	CHECKED BY:	SCALE:	DATE:
PD	-	AS NOTED	6.21.19

JOB NUMBER: VJ19072C

ITEM NUMBER: 1

JOB Barcode:

DRAWING NO. 1

Wróć

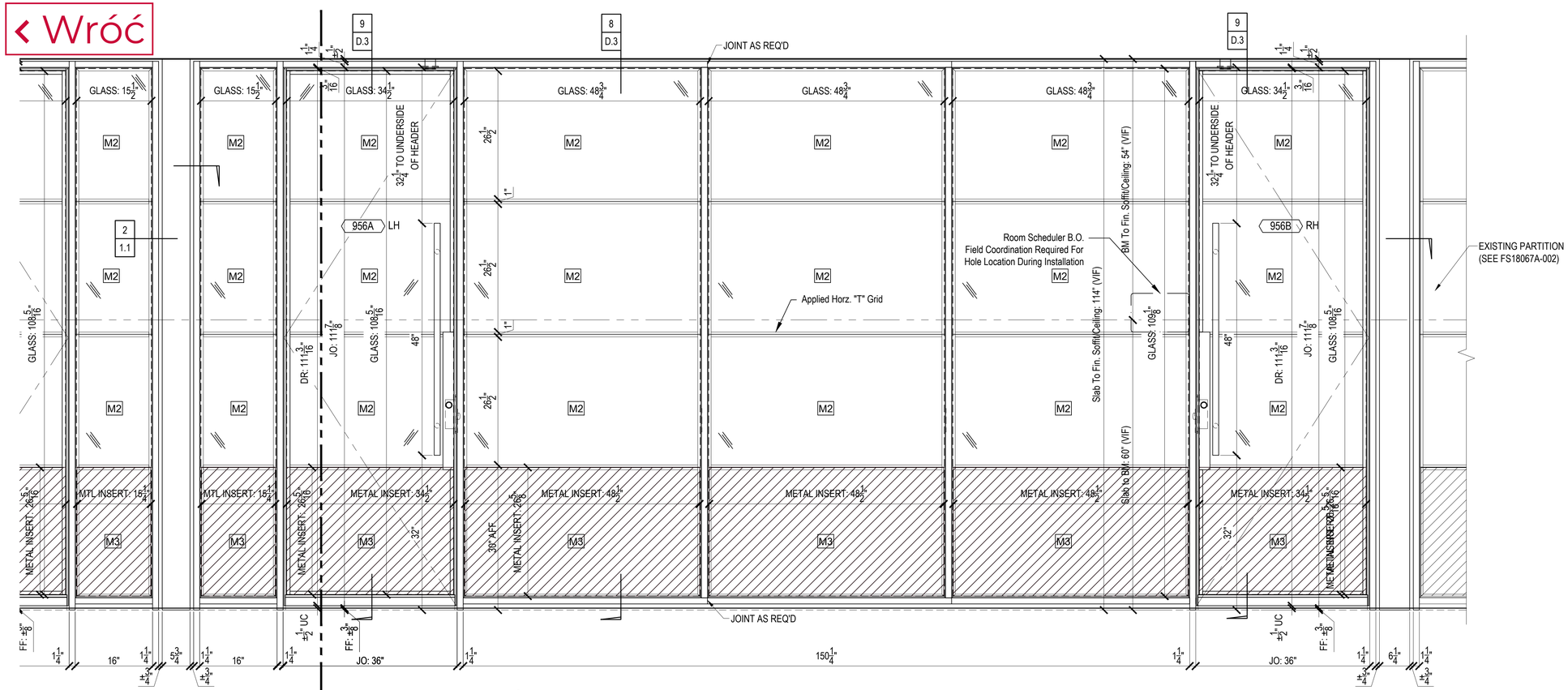

B 1.1 ELEVATION

SCALE: 1"=1'-0" REF: 1/A-209.00

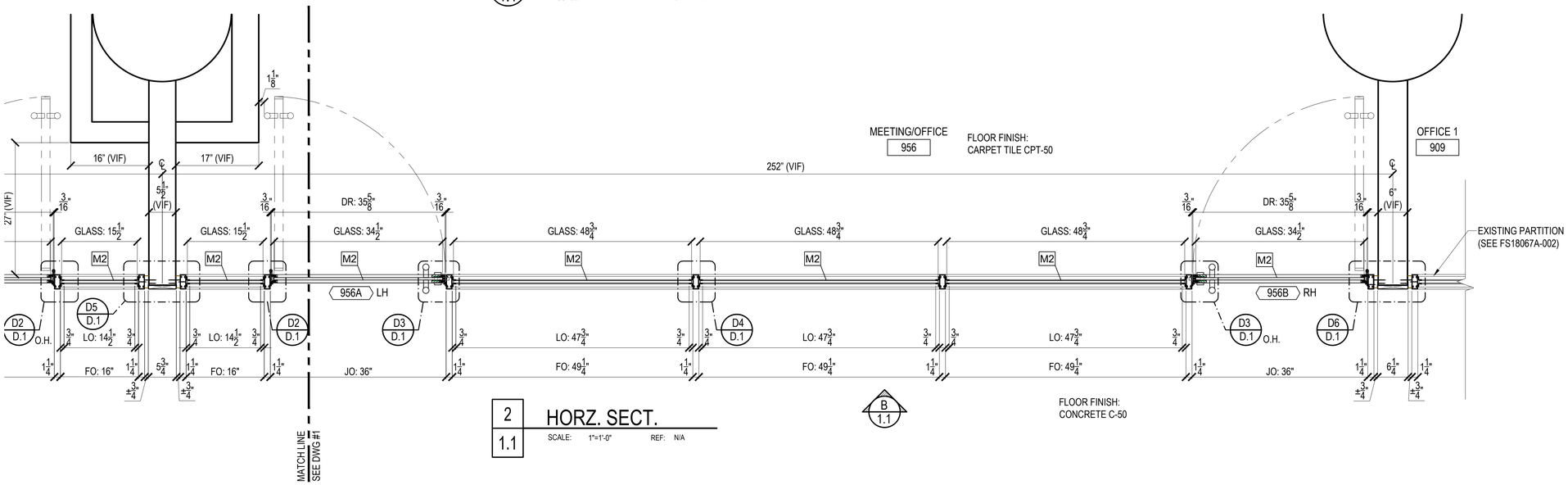

2 1.1 HORZ. SECT.

SCALE: 1"=1'-0" REF: N/A

☐ LEED ☐ FSC ☐ NAUF ☐ FIRE RATED

MATERIAL DESCRIPTIONS:

FINISH / WOOD SPECIES:

F1	Blackened Acid Dip Finish Per Approved Sample
F2	Black
-	-
-	-
-	-
-	-

CORES / SUBSTRATES:

C10A	1/8" HDF
C12G	11/16" PARTICLEBOARD
C12E	1/2" PARTICLEBOARD
C12H	3/4" PARTICLEBOARD
C12J	1" PARTICLEBOARD
C19E	1/2" PLYWOOD
-	-
-	-
-	-
-	-
-	-
-	-

SOLID HARDWOOD:

-	-
-	-
-	-

DOOR SLAB ASSEMBLY:

DS1	Metal Framed 1-3/4" Door with 1/2" Glass Light
DS2	Metal Framed 1-3/4" Sliding Door with 3/8" Glass Light
DS3	Metal Framed 2" Sliding Door with 3/8" Glass Light
-	-
-	-

OTHER MATERIAL (GLASS, STONE, METAL):

M1	1/16" x 3/8" Black Foam Tape
M2	1/2" Clear Tempered Glass (Polished edges, & VHB Tape)
M3	20 Gauge Aluminum Panel Insert
M4	3/8" Clear Tempered Glass (Polished edges, & VHB Tape)
M9	1/32" x 1/2" 3M Clear VHB Tape
M10	1/4" Wide 3M Clear VHB Tape, 40mil Thick
M11	3M Dusted Crystal Film
M12	Rubber Glazing Gasket- Black
M13	1-1/4"x 3" Aluminum Tube Extrusion
M14	1/2" x 1/2"x 1/8" Aluminum Angle
M15	3/4" x 3/4"x 1/8" Aluminum Angle
M19	3"x 3 x 1/8" Aluminum Sq.Tube
M20	1/16" x 1/4" Clear VHB Tape
M21	1" x 1/2" "T" Metal Bar
M22	1" x 3/4" "T" Metal Bar
M23	1-3/4"x 6" Aluminum Tube Extrusion
-	-
-	-
-	-
-	-

HARDWARE:

		FINISH:	QTY:
HS	See Door Hardware Schedule	-	-
-	-	-	-
-	-	-	-
-	-	-	-
-	-	-	-
-	-	-	-
-	-	-	-

BY OTHERS / EXCLUSIONS:

E1	Slab	-	-
E2	Finished Floor	-	-
E3	Finished Wall	-	-
E4	Finished Ceiling	-	-

DATE:	ISSUED FOR:	BY:
6.21.19	Submittal	PD
-	-	-
-	-	-
-	-	-
-	-	-

VERDE

Demountable Wood & Glass Partition System
20 Haynes Court
Ronkonkoma, NY 11779
Tel: 631.981.2000 Fax: 631.981.2002

ARCHITECT:
Ampersand Architecture
648 Broadway, Suite 912
New York, NY 10012
t: 212.777.1276

CONTRACTOR:
-
-
-
-

PROJECT: OXO
601 West 26th Street
New York, NY 10001
9th Floor

DRAWING TITLE: VERDE IndustrialSystem

DRAWN BY:	CHECKED BY:	SCALE:	DATE:
PD	-	AS NOTED	6.21.19

JOB NUMBER: VJ19072C

ITEM NUMBER: 1

JOB Barcode:

DRAWING NO. 1.1

METAL | MDF | PARTICLE BOARD

‹ Wróć

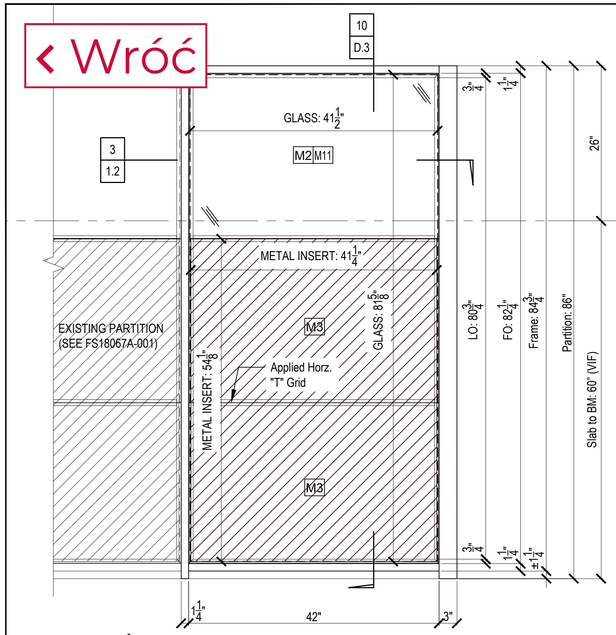

C 1.2 ELEVATION

SCALE: 1"=1'-0" REF: 2/A-209.00

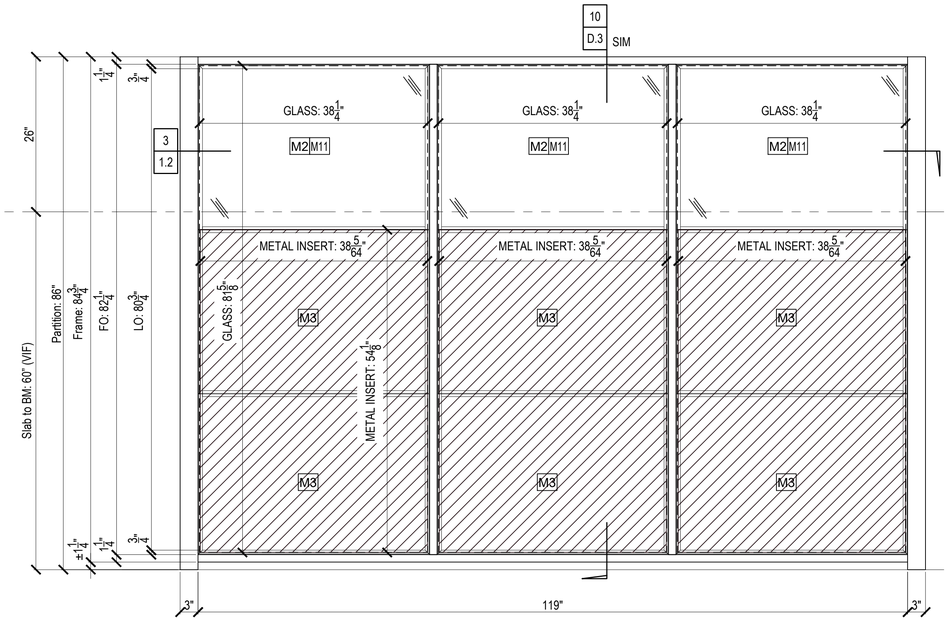

D 1.2 ELEVATION

SCALE: 1"=1'-0" REF: 4/A-209.00

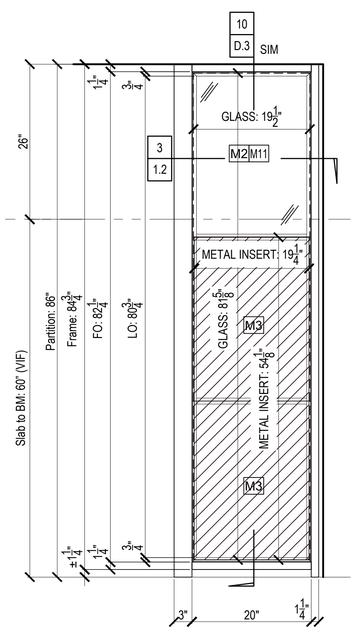

E 1.2 ELEVATION

SCALE: 1"=1'-0" REF: N/A

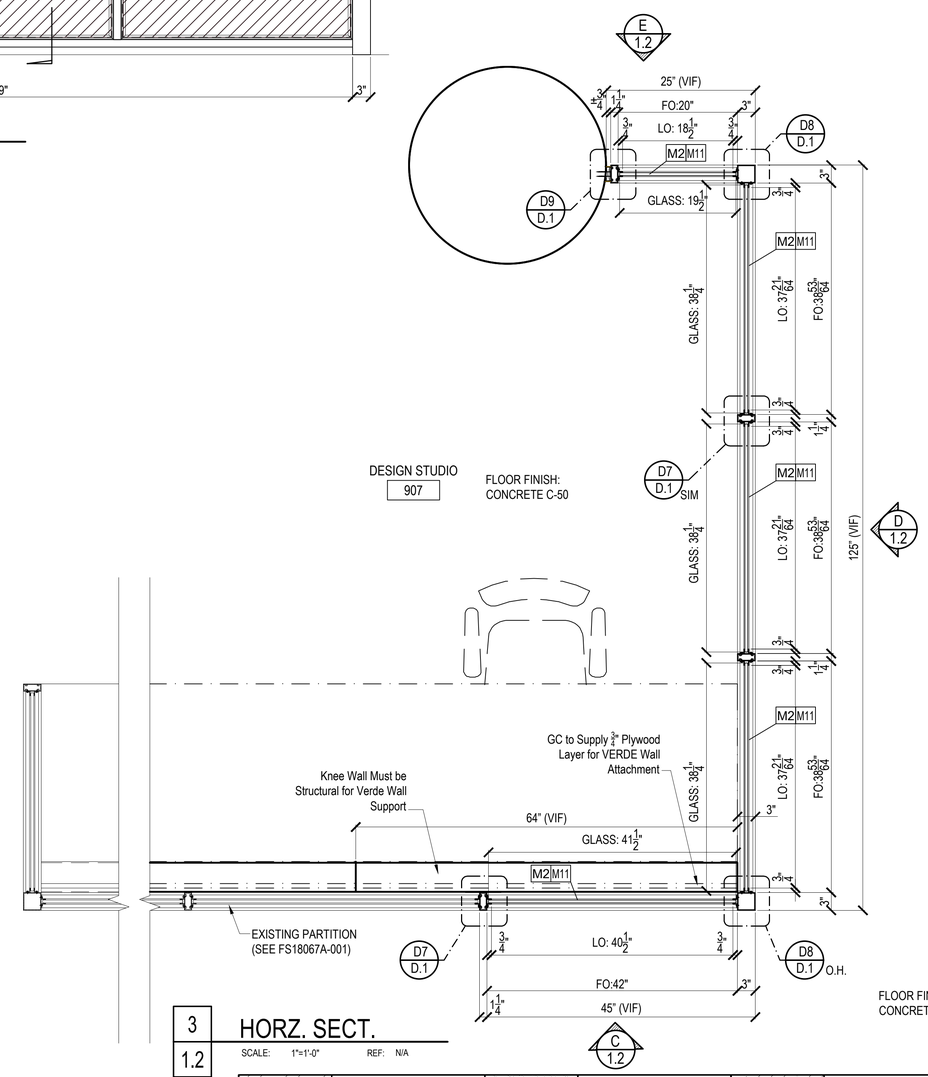

3 1.2 HORZ. SECT.

SCALE: 1"=1'-0" REF: N/A

METAL	MDF	PARTICLE BOARD

☐ LEED ☐ FSC ☐ NAUF ☐ FIRE RATED

MATERIAL DESCRIPTIONS:

FINISH / WOOD SPECIES:

F1	Blackened Acid Dip Finish Per Approved Sample
F2	Black
-	-
-	-
-	-
-	-

CORES / SUBSTRATES:

C10A	1/8" HDF
C12G	11/16" PARTICLEBOARD
C12E	1/2" PARTICLEBOARD
C12H	3/4" PARTICLEBOARD
C12J	1" PARTICLEBOARD
C19E	1/2" PLYWOOD
-	-
-	-
-	-
-	-
-	-
-	-

SOLID HARDWOOD:

-	-
-	-
-	-

DOOR SLAB ASSEMBLY:

DS1	Metal Framed 1-3/4" Door with 1/2" Glass Light
DS2	Metal Framed 1-3/4" Sliding Door with 3/8" Glass Light
DS3	Metal Framed 2" Sliding Door with 3/8" Glass Light
-	-
-	-

OTHER MATERIAL (GLASS, STONE, METAL):

M1	1/16" x 3/8" Black Foam Tape
M2	1/2" Clear Tempered Glass (Polished edges, & VHB Tape)
M3	20 Gauge Aluminum Panel Insert
M4	3/8" Clear Tempered Glass (Polished edges, & VHB Tape)
M9	1/32" x 1/2" 3M Clear VHB Tape
M10	1/4" Wide 3M Clear VHB Tape, 40mil Thick
M11	3M Dusted Crystal Film
M12	Rubber Glazing Gasket- Black
M13	1-1/4"x 3" Aluminum Tube Extrusion
M14	1/2" x 1/2"x 1/8" Aluminum Angle
M15	3/4" x 3/4"x 1/8" Aluminum Angle
M19	3"x 3 x 1/8" Aluminum Sq.Tube
M20	1/16" x 1/4" Clear VHB Tape
M21	1" x 1/2" "T" Metal Bar
M22	1" x 3/4" "T" Metal Bar
M23	1-3/4"x 6" Aluminum Tube Extrusion
-	-
-	-
-	-
-	-

HARDWARE:		FINISH:	QTY:
HS	See Door Hardware Schedule	-	-
-	-	-	-
-	-	-	-
-	-	-	-
-	-	-	-
-	-	-	-
-	-	-	-

BY OTHERS / EXCLUSIONS:

E1	Slab	-	-
E2	Finished Floor	-	-
E3	Finished Wall	-	-
E4	Finished Ceiling	-	-

DATE:	ISSUED FOR:	BY:
6.21.19	Submittal	PD
-	-	-
-	-	-
-	-	-
-	-	-

VERDE

Demountable Wood & Glass Partition System
20 Haynes Court
Ronkonkoma, NY 11779
Tel: 631.981.2000 Fax: 631.981.2002

ARCHITECT:
Ampersand Architecture
648 Broadway, Suite 912
New York, NY 10012
t: 212.777.1276

CONTRACTOR:
-
-
-
-

PROJECT: OXO
601 West 26th Street
New York, NY 10001
9th Floor

DRAWING TITLE: VERDE IndustrialSystem

DRAWN BY:	CHECKED BY:	SCALE:	DATE:
PD	-	AS NOTED	6.21.19

JOB NUMBER: VJ19072C

ITEM NUMBER: 1

JOB Barcode:

DRAWING NO. 1.2

‹ Wróć

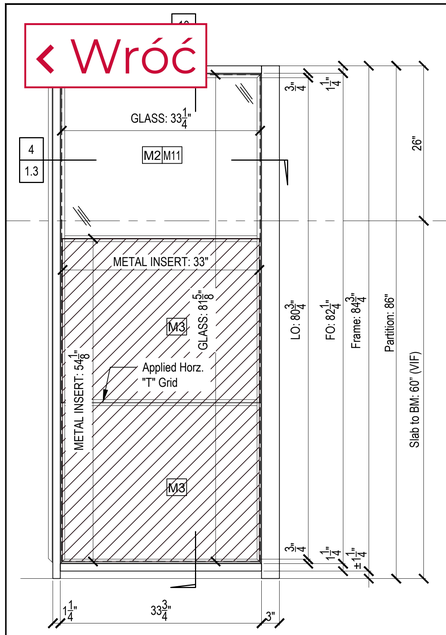

F 1.3 ELEVATION

SCALE: 1"=1'-0" REF: N/A

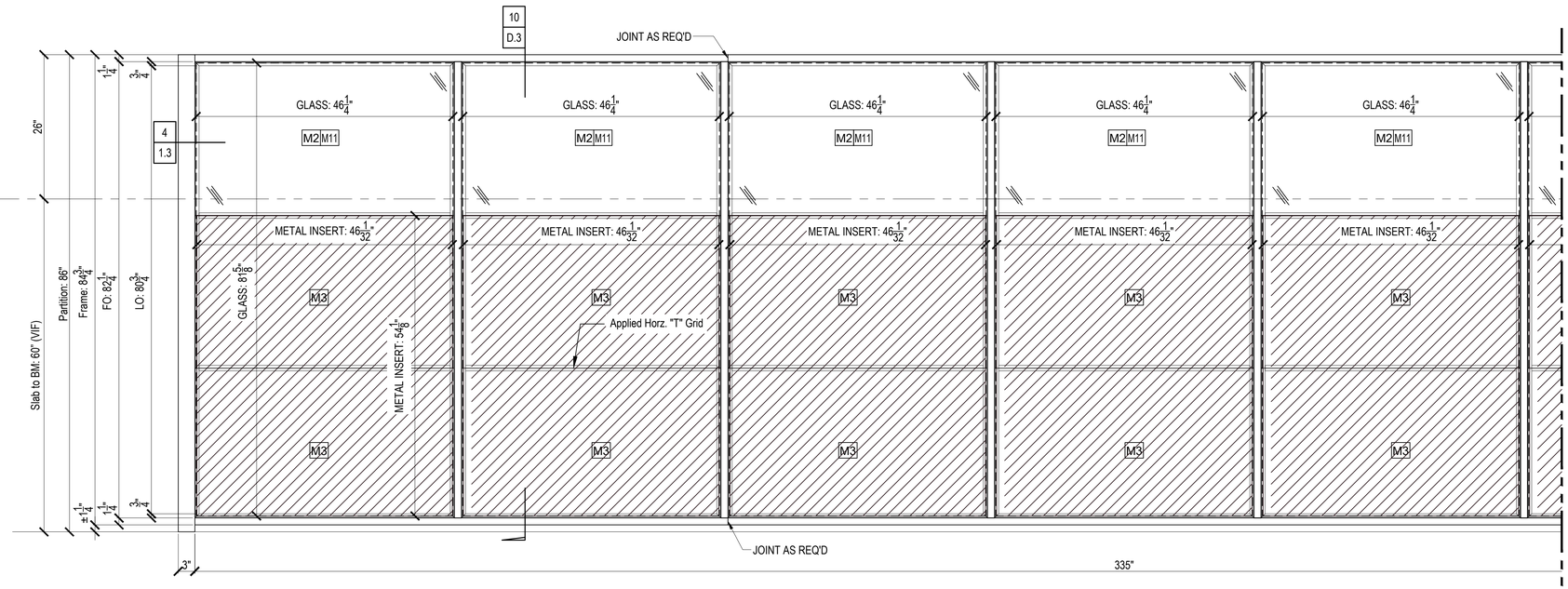

G 1.3 ELEVATION

SCALE: 1"=1'-0" REF: 2/A-209.00

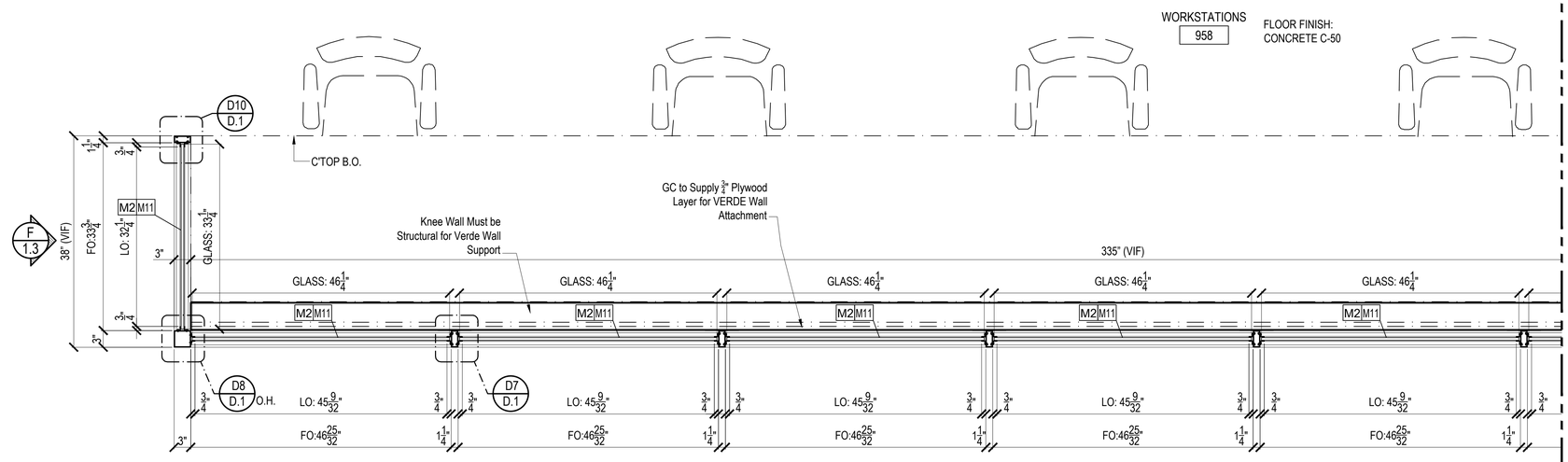

4 1.3 HORZ. SECT.

SCALE: 1"=1'-0" REF: N/A

☐ LEED ☐ FSC ☐ NAUF ☐ FIRE RATED

MATERIAL DESCRIPTIONS:

FINISH / WOOD SPECIES:	
F1	Blackened Acid Dip Finish Per Approved Sample
F2	Black
-	-
-	-
-	-
-	-

CORES / SUBSTRATES:	
C10A	1/8" HDF
C12G	11/16" PARTICLEBOARD
C12E	1/2" PARTICLEBOARD
C12H	3/4" PARTICLEBOARD
C12J	1" PARTICLEBOARD
C19E	1/2" PLYWOOD
-	-
-	-
-	-
-	-
-	-
-	-

SOLID HARDWOOD:	
-	-
-	-
-	-

DOOR SLAB ASSEMBLY:	
DS1	Metal Framed 1-3/4" Door with 1/2" Glass Light
DS2	Metal Framed 1-3/4" Sliding Door with 3/8" Glass Light
DS3	Metal Framed 2" Sliding Door with 3/8" Glass Light
-	-
-	-

OTHER MATERIAL (GLASS, STONE, METAL):	
M1	1/16" x 3/8" Black Foam Tape
M2	1/2" Clear Tempered Glass (Polished edges, & VHB Tape)
M3	20 Gauge Aluminum Panel Insert
M4	3/8" Clear Tempered Glass (Polished edges, & VHB Tape)
M9	1/32" x 1/2" 3M Clear VHB Tape
M10	1/4" Wide 3M Clear VHB Tape, 40mil Thick
M11	3M Dusted Crystal Film
M12	Rubber Glazing Gasket- Black
M13	1-1/4"x 3" Aluminum Tube Extrusion
M14	1/2" x 1/2"x 1/8" Aluminum Angle
M15	3/4" x 3/4"x 1/8" Aluminum Angle
M19	3"x 3 x 1/8" Aluminum Sq.Tube
M20	1/16" x 1/4" Clear VHB Tape
M21	1" x 1/2" "T" Metal Bar
M22	1" x 3/4" "T" Metal Bar
M23	1-3/4"x 6" Aluminum Tube Extrusion
-	-
-	-
-	-
-	-
-	-

HARDWARE:		FINISH:	QTY:
HS	See Door Hardware Schedule	-	-
-	-	-	-
-	-	-	-
-	-	-	-
-	-	-	-
-	-	-	-
-	-	-	-

BY OTHERS / EXCLUSIONS:			
E1	Slab	-	-
E2	Finished Floor	-	-
E3	Finished Wall	-	-
E4	Finished Ceiling	-	-

DATE:	ISSUED FOR:	BY:
6.21.19	Submittal	PD
-	-	-
-	-	-
-	-	-
-	-	-

VERDE

Demountable Wood & Glass Partition System
20 Haynes Court
Ronkonkoma, NY 11779
Tel: 631.981.2000 Fax: 631.981.2002

ARCHITECT:
Ampersand Architecture
648 Broadway, Suite 912
New York, NY 10012
t: 212.777.1276

CONTRACTOR:
-
-
-
-

PROJECT:
OXO
601 West 26th Street
New York, NY 10001
9th Floor

DRAWING TITLE:
VERDE IndustrialSystem

DRAWN BY:	CHECKED BY:	SCALE:	DATE:
PD	-	AS NOTED	6.21.19

JOB NUMBER: VJ19072C

ITEM NUMBER: 1

JOB Barcode:

DRAWING NO. 1.3

METAL | MDF | PARTICLE BOARD

‹ Wróć

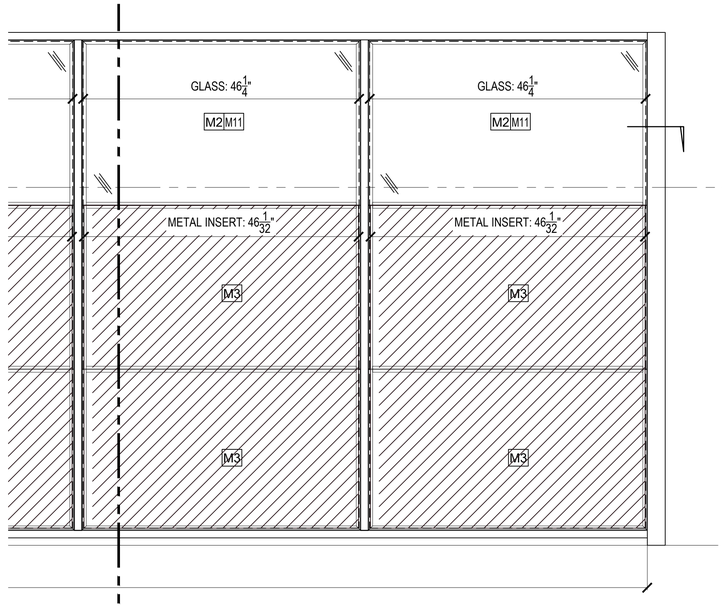

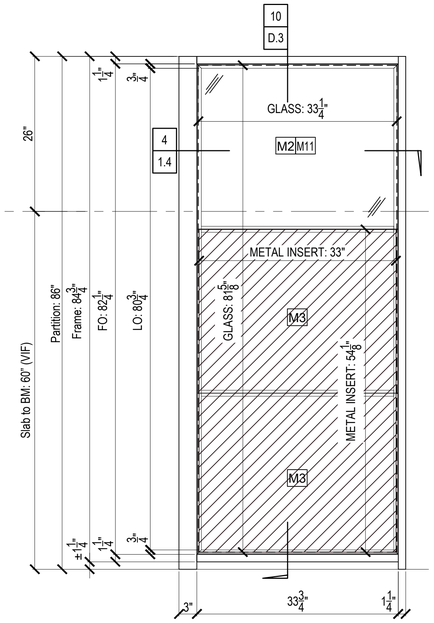

H 1.4 ELEVATION

SCALE: 1"=1'-0" REF: N/A

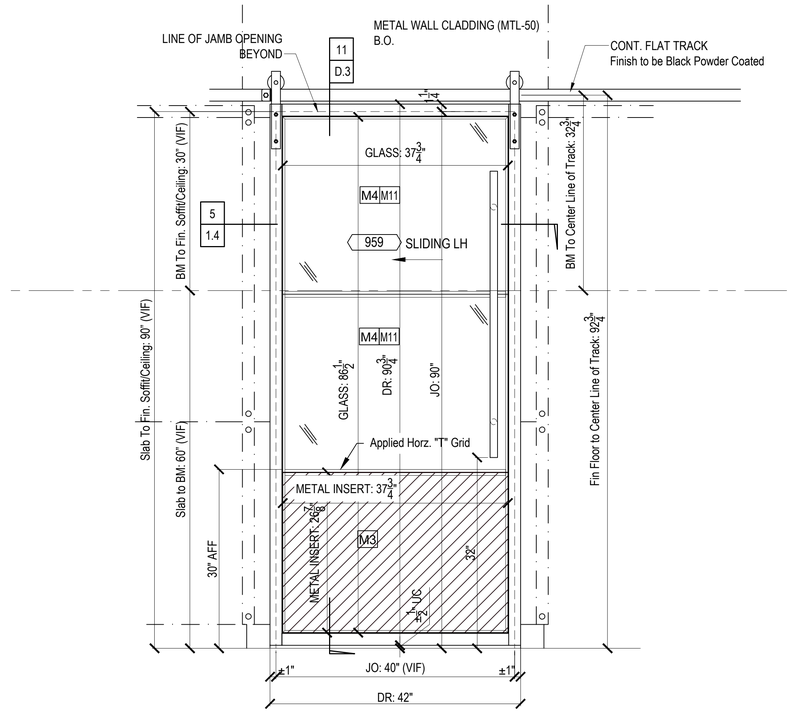

J 1.4 ELEVATION

SCALE: 1"=1'-0" REF: 3/A-209.00

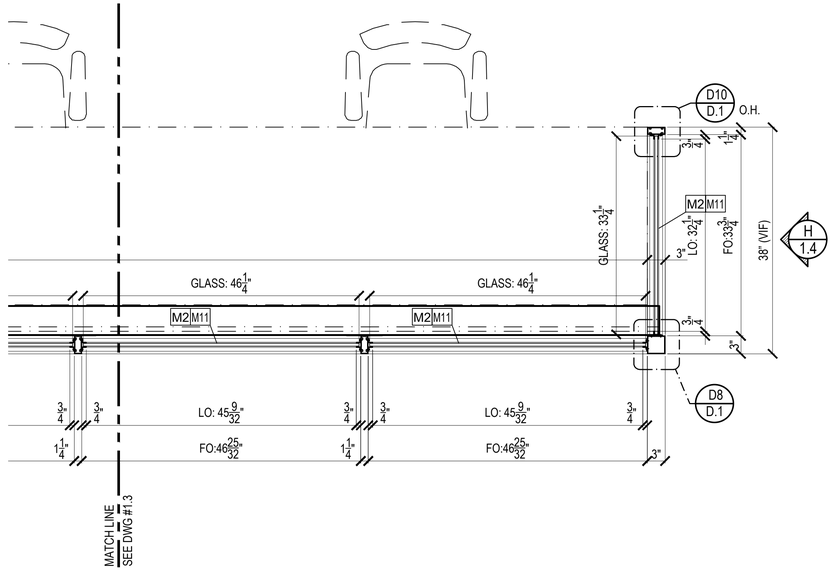

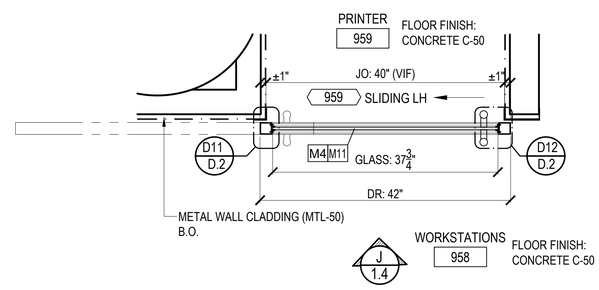

5 1.4 HORZ. SECT.

SCALE: 1"=1'-0" REF: N/A

☐ LEED ☐ FSC ☐ NAUF ☐ FIRE RATED

MATERIAL DESCRIPTIONS:

FINISH / WOOD SPECIES:	
F1	Blackened Acid Dip Finish Per Approved Sample
F2	Black
-	-
-	-
-	-
-	-

CORES / SUBSTRATES:	
C10A	1/8" HDF
C12G	11/16" PARTICLEBOARD
C12E	1/2" PARTICLEBOARD
C12H	3/4" PARTICLEBOARD
C12J	1" PARTICLEBOARD
C19E	1/2" PLYWOOD
-	-
-	-
-	-
-	-
-	-
-	-

SOLID HARDWOOD:	
-	-
-	-
-	-

DOOR SLAB ASSEMBLY:	
DS1	Metal Framed 1-3/4" Door with 1/2" Glass Light
DS2	Metal Framed 1-3/4" Sliding Door with 3/8" Glass Light
DS3	Metal Framed 2" Sliding Door with 3/8" Glass Light
-	-
-	-

OTHER MATERIAL (GLASS, STONE, METAL):	
M1	1/16" x 3/8" Black Foam Tape
M2	1/2" Clear Tempered Glass (Polished edges, & VHB Tape)
M3	20 Gauge Aluminum Panel Insert
M4	3/8" Clear Tempered Glass (Polished edges, & VHB Tape)
M9	1/32" x 1/2" 3M Clear VHB Tape
M10	1/4" Wide 3M Clear VHB Tape, 40mil Thick
M11	3M Dusted Crystal Film
M12	Rubber Glazing Gasket- Black
M13	1-1/4"x 3" Aluminum Tube Extrusion
M14	1/2" x 1/2"x 1/8" Aluminum Angle
M15	3/4" x 3/4"x 1/8" Aluminum Angle
M19	3"x 3 x 1/8" Aluminum Sq.Tube
M20	1/16" x 1/4" Clear VHB Tape
M21	1" x 1/2" "T" Metal Bar
M22	1" x 3/4" "T" Metal Bar
M23	1-3/4"x 6" Aluminum Tube Extrusion
-	-
-	-
-	-
-	-

HARDWARE:		FINISH:	QTY:
HS	See Door Hardware Schedule	-	-
-	-	-	-
-	-	-	-
-	-	-	-
-	-	-	-
-	-	-	-
-	-	-	-

BY OTHERS / EXCLUSIONS:			
E1	Slab	-	-
E2	Finished Floor	-	-
E3	Finished Wall	-	-
E4	Finished Ceiling	-	-

DATE:	ISSUED FOR:	BY:
6.21.19	Submittal	PD
-	-	-
-	-	-
-	-	-
-	-	-

VERDE

Demountable Wood & Glass Partition System
20 Haynes Court
Ronkonkoma, NY 11779
Tel: 631.981.2000 Fax: 631.981.2002

ARCHITECT:
Ampersand Architecture
648 Broadway, Suite 912
New York, NY 10012
t: 212.777.1276

CONTRACTOR:
-
-
-
-

PROJECT: OXO
601 West 26th Street
New York, NY 10001
9th Floor

DRAWING TITLE: VERDE IndustrialSystem

DRAWN BY:	CHECKED BY:	SCALE:	DATE:
PD	-	AS NOTED	6.21.19

JOB NUMBER: VJ19072C

ITEM NUMBER: 1

JOB Barcode:

DRAWING NO. 1.4

METAL | MDF | PARTICLE BOARD

< Wróć

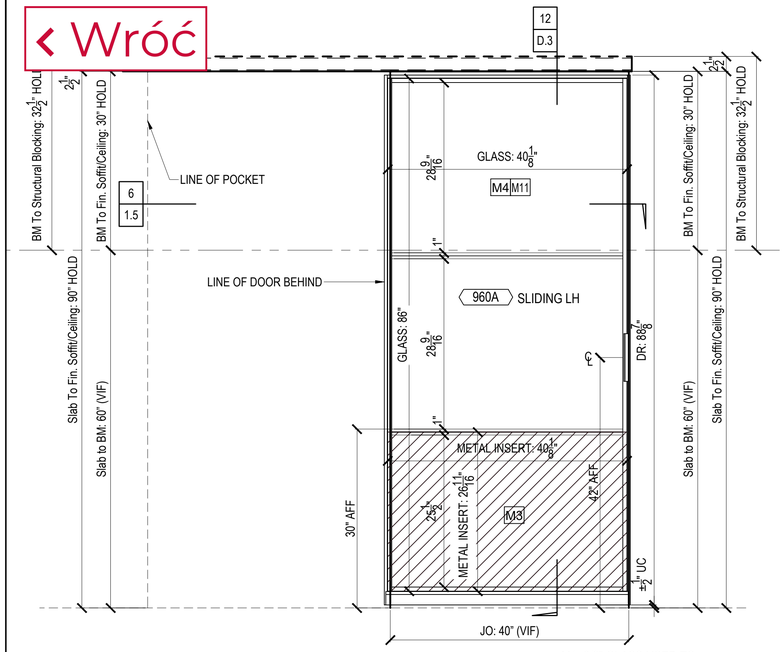

M4- 3/8" GLASS USED TO LIGHTEN DOOR WEIGHT: APPROX. 285 LBS TOTAL w/ FRAME

K 1.5 ELEVATION

SCALE: 1"=1'-0" REF: 4/A-205.00

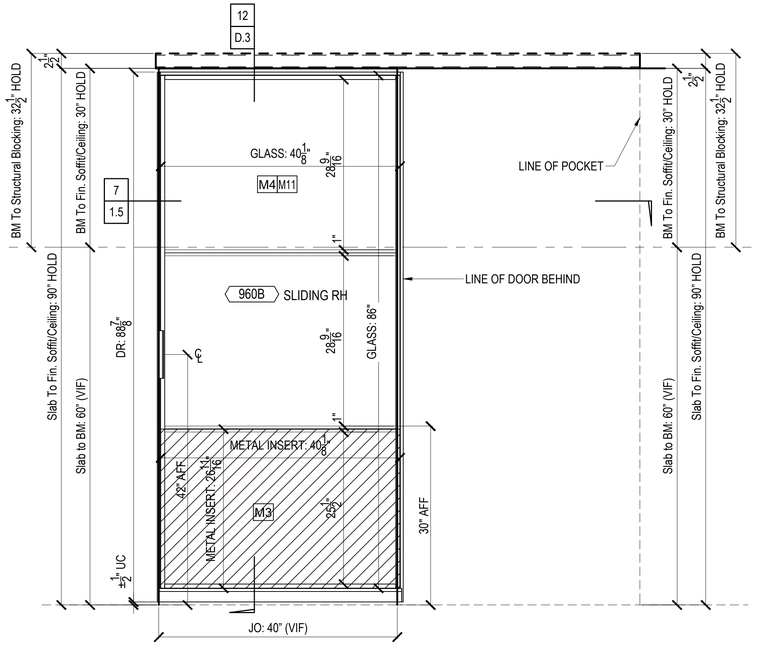

M4- 3/8" GLASS USED TO LIGHTEN DOOR WEIGHT: APPROX. 285 LBS TOTAL w/ FRAME

L 1.5 ELEVATION

SCALE: 1"=1'-0" REF: 4/A-205.00

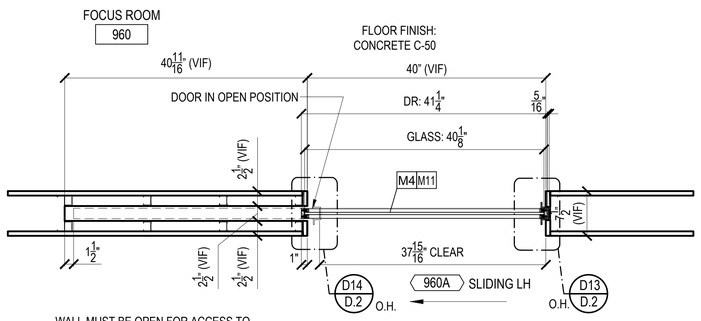

WALL MUST BE OPEN FOR ACCESS TO INSTALLATION OF POCKET DOORS. ALL JAMBS TO BE DRYWALL, VERDE SUPPLY AND INSTALL DOOR AND SLIDER TRACK & HW ONLY.

6 1.5 HORZ. SECT.

SCALE: 1"=1'-0" REF: N/A

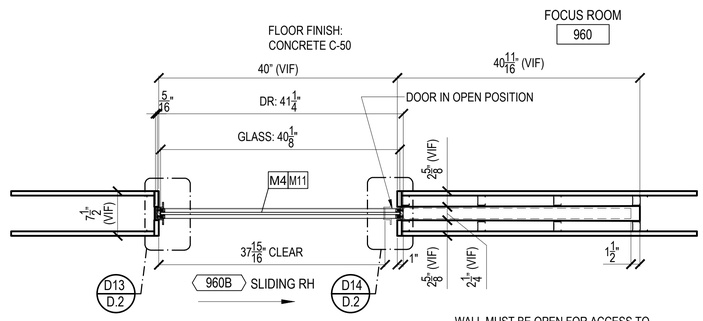

WALL MUST BE OPEN FOR ACCESS TO INSTALLATION OF POCKET DOORS. ALL JAMBS TO BE DRYWALL, VERDE SUPPLY AND INSTALL DOOR AND SLIDER TRACK & HW ONLY.

7 1.5 HORZ. SECT.

SCALE: 1"=1'-0" REF: N/A

☐ LEED ☐ FSC ☐ NAUF ☐ FIRE RATED

MATERIAL DESCRIPTIONS:

FINISH / WOOD SPECIES:	
F1	Blackened Acid Dip Finish Per Approved Sample
F2	Black
-	-
-	-
-	-
-	-

CORES / SUBSTRATES:	
C10A	1/8" HDF
C12G	11/16" PARTICLEBOARD
C12E	1/2" PARTICLEBOARD
C12H	3/4" PARTICLEBOARD
C12J	1" PARTICLEBOARD
C19E	1/2" PLYWOOD
-	-
-	-
-	-
-	-
-	-
-	-

SOLID HARDWOOD:	
-	-
-	-
-	-

DOOR SLAB ASSEMBLY:	
DS1	Metal Framed 1-3/4" Door with 1/2" Glass Light
DS2	Metal Framed 1-3/4" Sliding Door with 3/8" Glass Light
DS3	Metal Framed 2" Sliding Door with 3/8" Glass Light
-	-
-	-

OTHER MATERIAL (GLASS, STONE, METAL):	
M1	1/16" x 3/8" Black Foam Tape
M2	1/2" Clear Tempered Glass (Polished edges, & VHB Tape)
M3	20 Gauge Aluminum Panel Insert
M4	3/8" Clear Tempered Glass (Polished edges, & VHB Tape)
M9	1/32" x 1/2" 3M Clear VHB Tape
M10	1/4" Wide 3M Clear VHB Tape, 40mil Thick
M11	3M Dusted Crystal Film
M12	Rubber Glazing Gasket- Black
M13	1-1/4"x 3" Aluminum Tube Extrusion
M14	1/2" x 1/2"x 1/8" Aluminum Angle
M15	3/4" x 3/4"x 1/8" Aluminum Angle
M19	3"x 3 x 1/8" Aluminum Sq.Tube
M20	1/16" x 1/4" Clear VHB Tape
M21	1" x 1/2" "T" Metal Bar
M22	1" x 3/4" "T" Metal Bar
M23	1-3/4"x 6" Aluminum Tube Extrusion
-	-
-	-
-	-
-	-

HARDWARE:		FINISH:	QTY:
HS	See Door Hardware Schedule	-	-
-	-	-	-
-	-	-	-
-	-	-	-
-	-	-	-
-	-	-	-
-	-	-	-

BY OTHERS / EXCLUSIONS:			
E1	Slab	-	-
E2	Finished Floor	-	-
E3	Finished Wall	-	-
E4	Finished Ceiling	-	-

DATE:	ISSUED FOR:	BY:
6.21.19	Submittal	PD
-	-	-
-	-	-
-	-	-
-	-	-

VERDE

Demountable Wood & Glass Partition System
20 Haynes Court
Ronkonkoma, NY 11779
Tel: 631.981.2000 Fax: 631.981.2002

ARCHITECT:
Ampersand Architecture
648 Broadway, Suite 912
New York, NY 10012
t: 212.777.1276

CONTRACTOR:
-
-
-
-

PROJECT: OXO
601 West 26th Street
New York, NY 10001
9th Floor

DRAWING TITLE: VERDE IndustrialSystem

DRAWN BY:	CHECKED BY:	SCALE:	DATE:
PD	-	AS NOTED	6.21.19

JOB NUMBER: VJ19072C

ITEM NUMBER: 1

JOB Barcode:

DRAWING NO: 1.5

METAL | MDF | PARTICLE BOARD

‹ Wróć

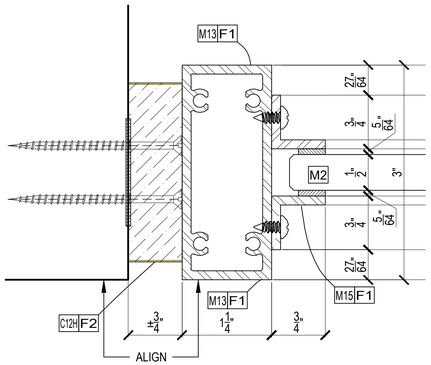

D1 / D.1 DETAIL
SCALE: 1'-0"=1'-0" REF: N/A

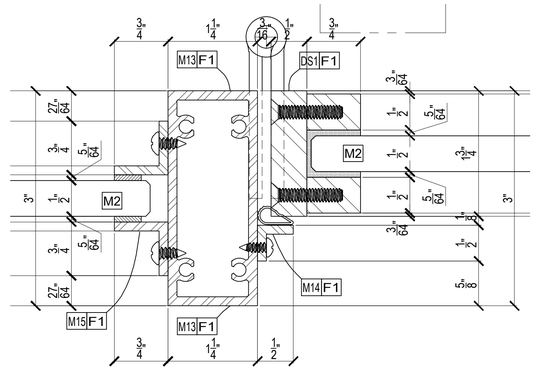

D2 / D.1 DETAIL
SCALE: 1'-0"=1'-0" REF: N/A

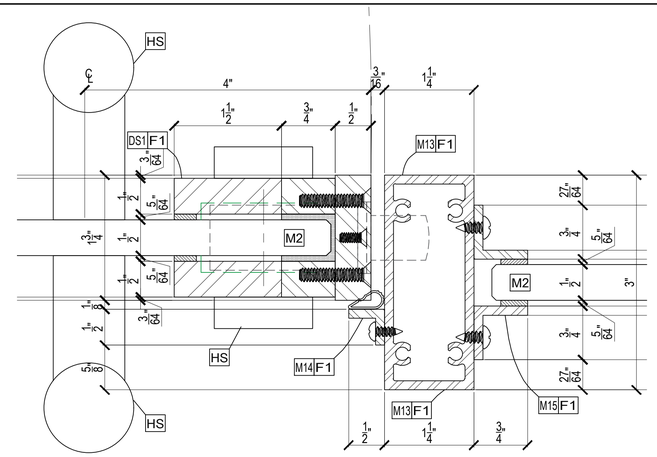

D3 / D.1 DETAIL
SCALE: 1'-0"=1'-0" REF: N/A

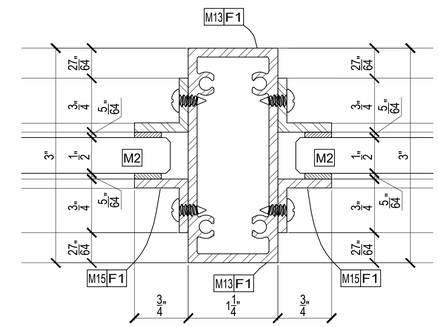

D4 / D.1 DETAIL
SCALE: 1'-0"=1'-0" REF: N/A

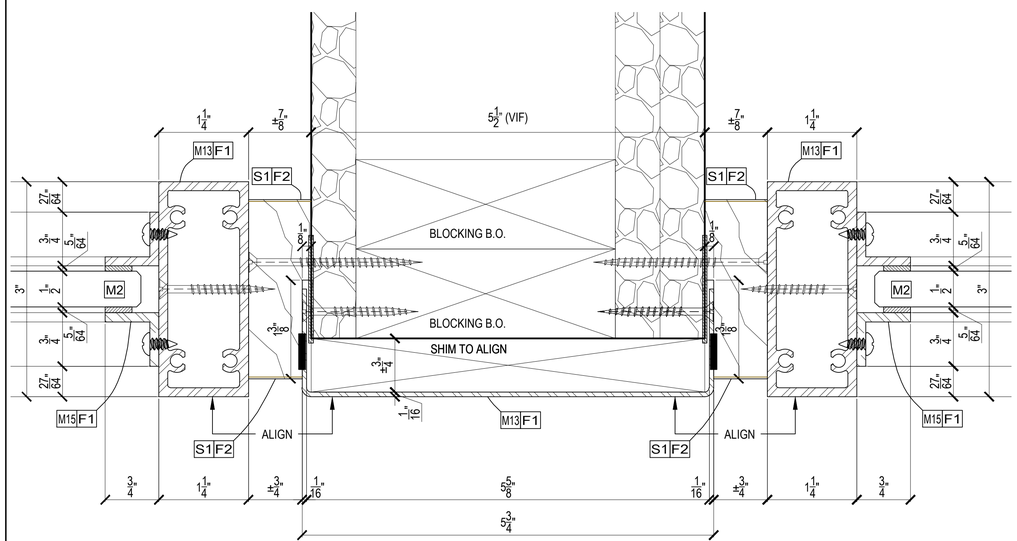

D5 / D.1 DETAIL
SCALE: 1'-0"=1'-0" REF: N/A

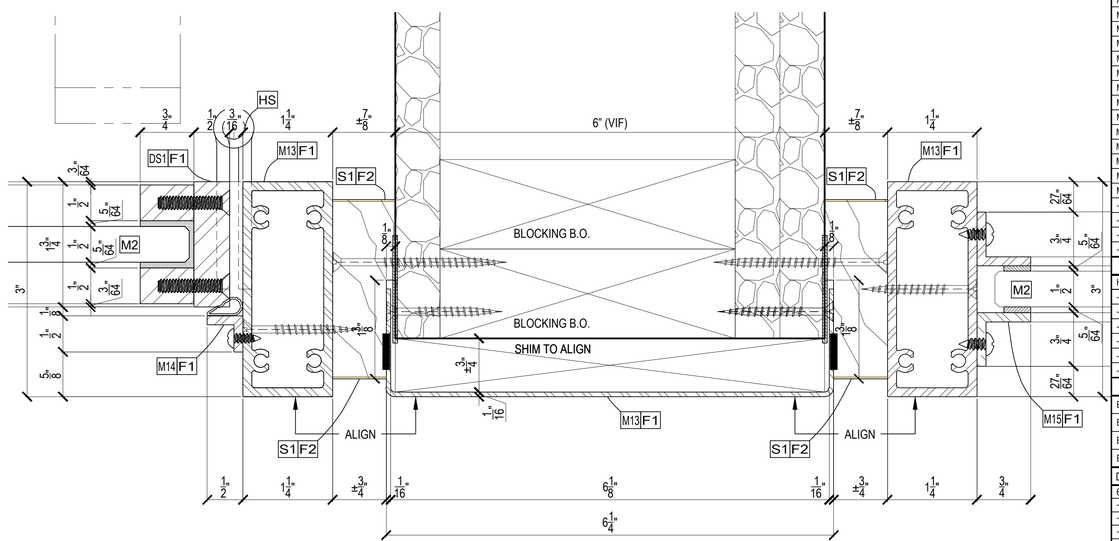

D6 / D.1 DETAIL
SCALE: 1'-0"=1'-0" REF: N/A

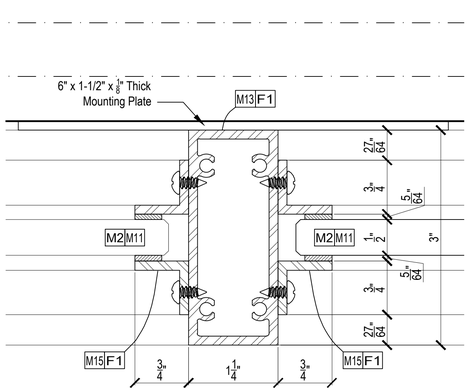

D7 / D.1 DETAIL
SCALE: 1'-0"=1'-0" REF: N/A

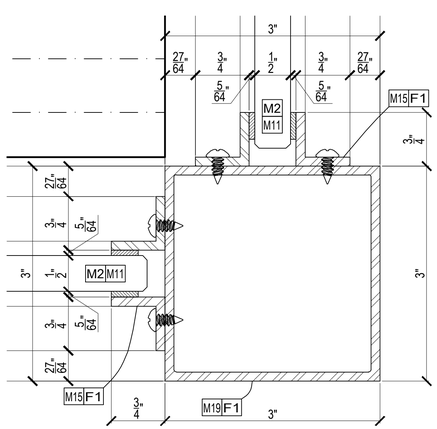

D8 / D.1 DETAIL
SCALE: 1'-0"=1'-0" REF: N/A

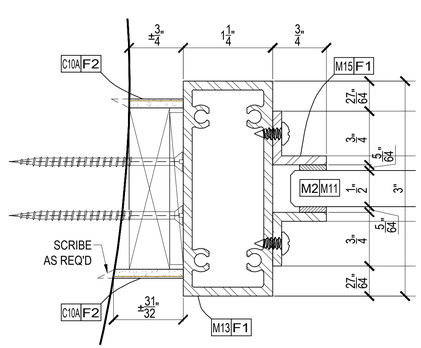

D9 / D.1 DETAIL
SCALE: 1'-0"=1'-0" REF: N/A

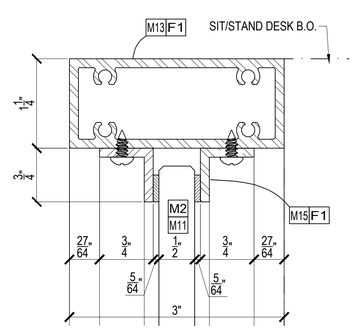

D10 / D.1 DETAIL
SCALE: 1'-0"=1'-0" REF: N/A

☐ LEED ☐ FSC ☐ NAUF ☐ FIRE RATED

MATERIAL DESCRIPTIONS:

FINISH / WOOD SPECIES:	
F1	Blackened Acid Dip Finish Per Approved Sample
F2	Black
-	-
-	-
-	-
-	-

CORES / SUBSTRATES:	
C10A	1/8" HDF
C12G	11/16" PARTICLEBOARD
C12E	1/2" PARTICLEBOARD
C12H	3/4" PARTICLEBOARD
C12J	1" PARTICLEBOARD
C19E	1/2" PLYWOOD
-	-
-	-
-	-
-	-
-	-
-	-

SOLID HARDWOOD:	
-	-
-	-
-	-

DOOR SLAB ASSEMBLY:	
DS1	Metal Framed 1-3/4" Door with 1/2" Glass Light
DS2	Metal Framed 1-3/4" Sliding Door with 3/8" Glass Light
DS3	Metal Framed 2" Sliding Door with 3/8" Glass Light
-	-
-	-

OTHER MATERIAL (GLASS, STONE, METAL):	
M1	1/16" x 3/8" Black Foam Tape
M2	1/2" Clear Tempered Glass (Polished edges, & VHB Tape)
M3	20 Gauge Aluminum Panel Insert
M4	3/8" Clear Tempered Glass (Polished edges, & VHB Tape)
M9	1/32" x 1/2" 3M Clear VHB Tape
M10	1/4" Wide 3M Clear VHB Tape, 40mil Thick
M11	3M Dusted Crystal Film
M12	Rubber Glazing Gasket- Black
M13	1-1/4"x 3" Aluminum Tube Extrusion
M14	1/2" x 1/2"x 1/8" Aluminum Angle
M15	3/4" x 3/4"x 1/8" Aluminum Angle
M19	3"x 3 x 1/8" Aluminum Sq.Tube
M20	1/16" x 1/4" Clear VHB Tape
M21	1" x 1/2" "T" Metal Bar
M22	1" x 3/4" "T" Metal Bar
M23	1-3/4"x 6" Aluminum Tube Extrusion
-	-
-	-
-	-
-	-
-	-

HARDWARE:		FINISH:	QTY:
HS	See Door Hardware Schedule	-	-
-	-	-	-
-	-	-	-
-	-	-	-
-	-	-	-
-	-	-	-
-	-	-	-

BY OTHERS / EXCLUSIONS:			
E1	Slab	-	-
E2	Finished Floor	-	-
E3	Finished Wall	-	-
E4	Finished Ceiling	-	-

DATE:	ISSUED FOR:	BY:
6.21.19	Submittal	PD
-	-	-
-	-	-
-	-	-
-	-	-

VERDE

Demountable Wood & Glass Partition System
20 Haynes Court
Ronkonkoma, NY 11779
Tel: 631.981.2000 Fax: 631.981.2002

ARCHITECT:
Ampersand Architecture
648 Broadway, Suite 912
New York, NY 10012
t: 212.777.1276

CONTRACTOR:
-
-
-
-

PROJECT:
OXO
601 West 26th Street
New York, NY 10001
9th Floor

DRAWING TITLE:
VERDE IndustrialSystem

DRAWN BY:	CHECKED BY:	SCALE:	DATE:
PD	-	AS NOTED	6.21.19

JOB NUMBER: VJ19072C

ITEM NUMBER: 1

JOB Barcode:

DRAWING NO. D.1

METAL | MDF | PARTICLE BOARD

< Wróć

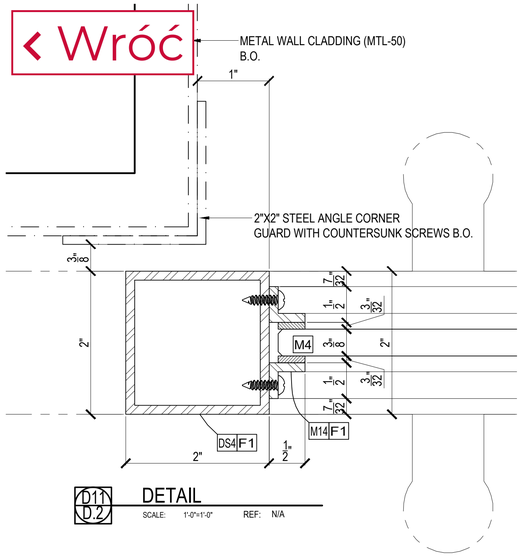

D11 / D.2 DETAIL
SCALE: 1'-0"=1'-0" REF: N/A

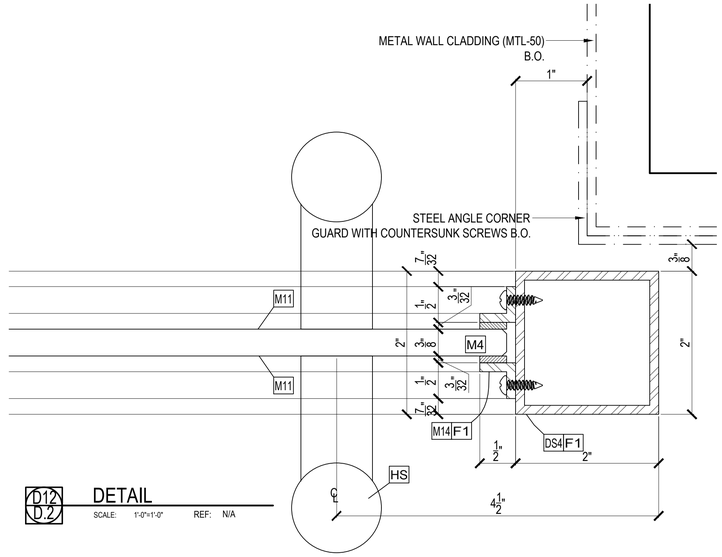

D12 / D.2 DETAIL
SCALE: 1'-0"=1'-0" REF: N/A

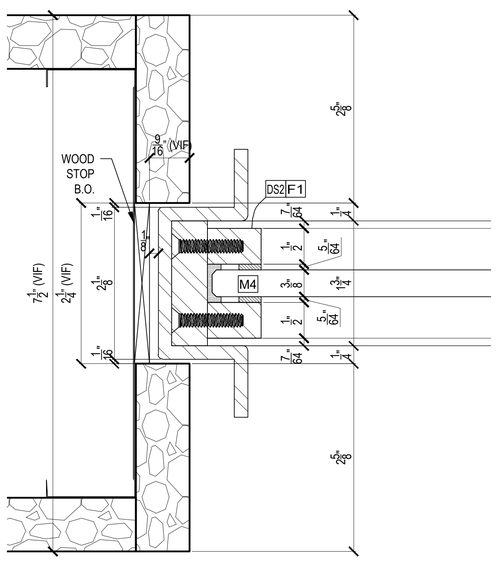

D13 / D.2 DETAIL
SCALE: 1'-0"=1'-0" REF: N/A

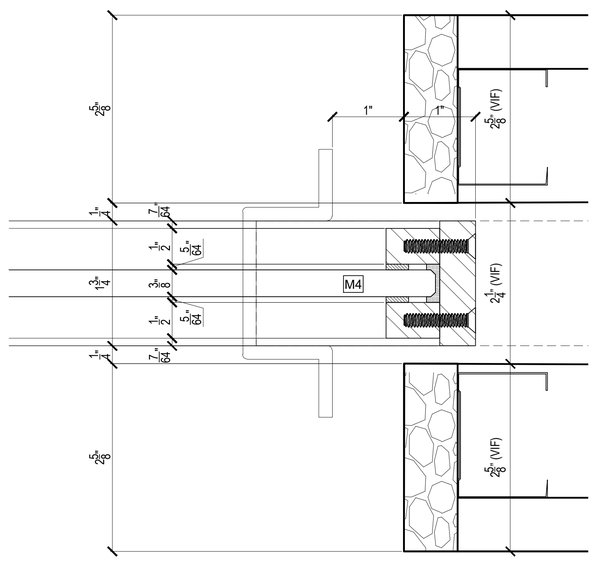

D14 / D.2 DETAIL
SCALE: 1'-0"=1'-0" REF: N/A

☐ LEED ☐ FSC ☐ NAUF ☐ FIRE RATED

MATERIAL DESCRIPTIONS:

FINISH / WOOD SPECIES:	
F1	Blackened Acid Dip Finish Per Approved Sample
F2	Black
-	-
-	-
-	-
-	-

CORES / SUBSTRATES:	
C10A	1/8" HDF
C12G	11/16" PARTICLEBOARD
C12E	1/2" PARTICLEBOARD
C12H	3/4" PARTICLEBOARD
C12J	1" PARTICLEBOARD
C19E	1/2" PLYWOOD
-	-
-	-
-	-
-	-
-	-
-	-

SOLID HARDWOOD:	
-	-
-	-
-	-

DOOR SLAB ASSEMBLY:	
DS1	Metal Framed 1-3/4" Door with 1/2" Glass Light
DS2	Metal Framed 1-3/4" Sliding Door with 3/8" Glass Light
DS3	Metal Framed 2" Sliding Door with 3/8" Glass Light
-	-
-	-

OTHER MATERIAL (GLASS, STONE, METAL):	
M1	1/16" x 3/8" Black Foam Tape
M2	1/2" Clear Tempered Glass (Polished edges, & VHB Tape)
M3	20 Gauge Aluminum Panel Insert
M4	3/8" Clear Tempered Glass (Polished edges, & VHB Tape)
M9	1/32" x 1/2" 3M Clear VHB Tape
M10	1/4" Wide 3M Clear VHB Tape, 40mil Thick
M11	3M Dusted Crystal Film
M12	Rubber Glazing Gasket- Black
M13	1-1/4"x 3" Aluminum Tube Extrusion
M14	1/2" x 1/2"x 1/8" Aluminum Angle
M15	3/4" x 3/4"x 1/8" Aluminum Angle
M19	3"x 3 x 1/8" Aluminum Sq.Tube
M20	1/16" x 1/4" Clear VHB Tape
M21	1" x 1/2" "T" Metal Bar
M22	1" x 3/4" "T" Metal Bar
M23	1-3/4"x 6" Aluminum Tube Extrusion
-	-
-	-
-	-
-	-

HARDWARE:		FINISH:	QTY:
HS	See Door Hardware Schedule	-	-
-	-	-	-
-	-	-	-
-	-	-	-
-	-	-	-
-	-	-	-
-	-	-	-

BY OTHERS / EXCLUSIONS:			
E1	Slab	-	-
E2	Finished Floor	-	-
E3	Finished Wall	-	-
E4	Finished Ceiling	-	-

DATE:	ISSUED FOR:	BY:
6.21.19	Submittal	PD
-	-	-
-	-	-
-	-	-
-	-	-

VERDE

Demountable Wood & Glass Partition System
20 Haynes Court
Ronkonkoma, NY 11779
Tel: 631.981.2000 Fax: 631.981.2002

ARCHITECT:
Ampersand Architecture
648 Broadway, Suite 912
New York, NY 10012
t: 212.777.1276

CONTRACTOR:
-
-
-
-

PROJECT:
OXO
601 West 26th Street
New York, NY 10001
9th Floor

DRAWING TITLE:
VERDE IndustrialSystem

DRAWN BY:	CHECKED BY:	SCALE:	DATE:
PD	-	AS NOTED	6.21.19

JOB NUMBER: VJ19072C

ITEM NUMBER: 1

JOB Barcode:

DRAWING NO. D.2

METAL | MDF | PARTICLE BOARD

‹ Wróć

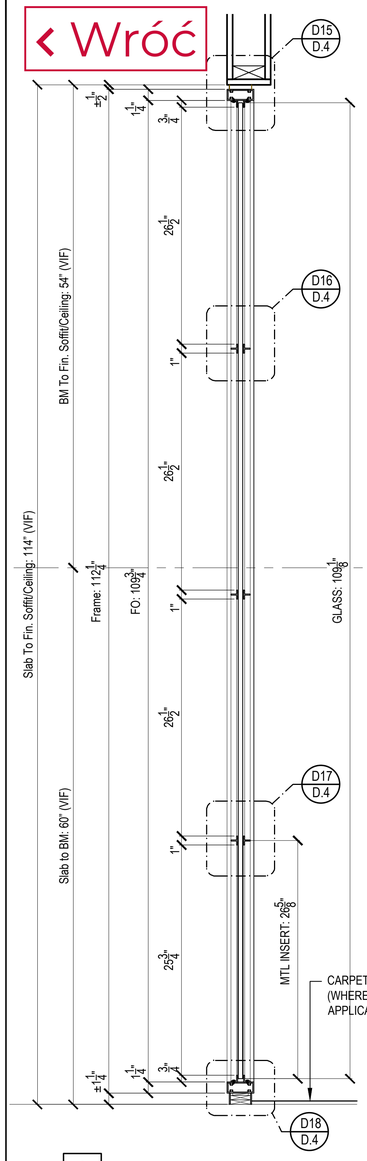

8 D.3 VERT. SECT.
SCALE: 1-1/2"=1'-0" N/A

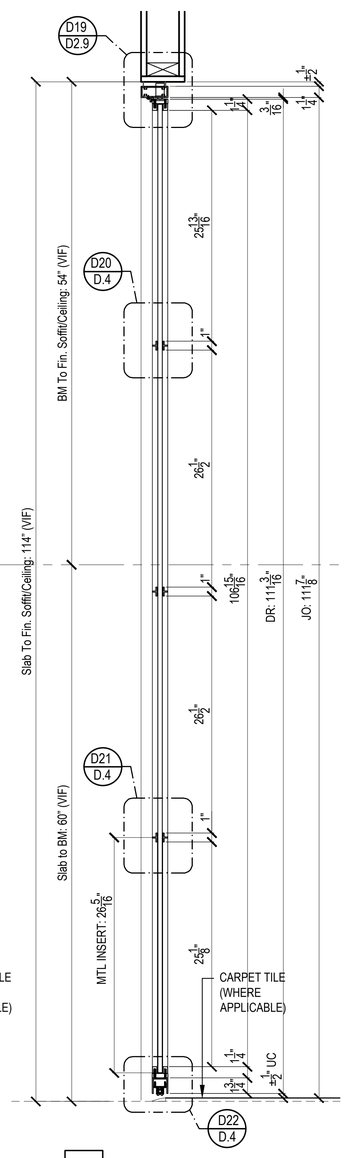

9 D.3 VERT. SECT.
SCALE: 1-1/2"=1'-0" N/A

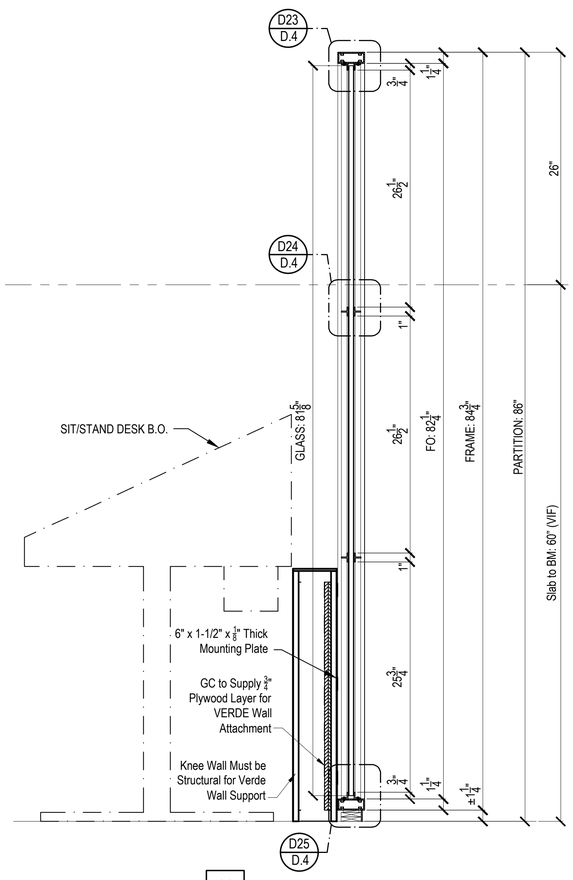

10 D.3 VERT. SECT.
SCALE: 1-1/2"=1'-0" N/A

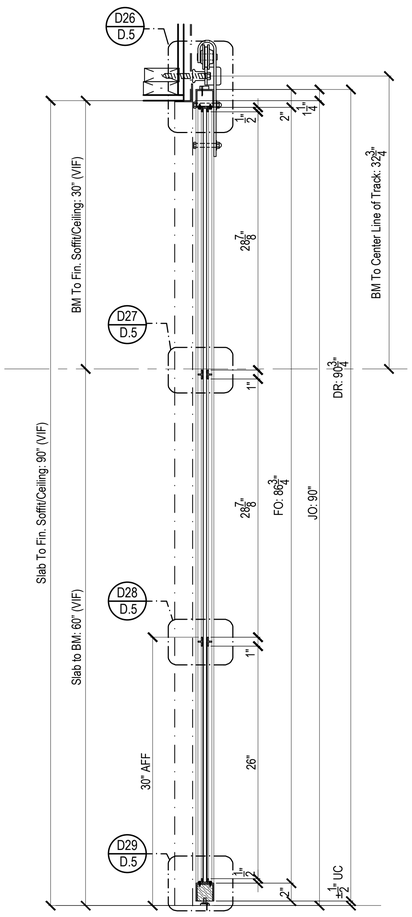

11 D.3 VERT. SECT.
SCALE: 1-1/2"=1'-0" N/A

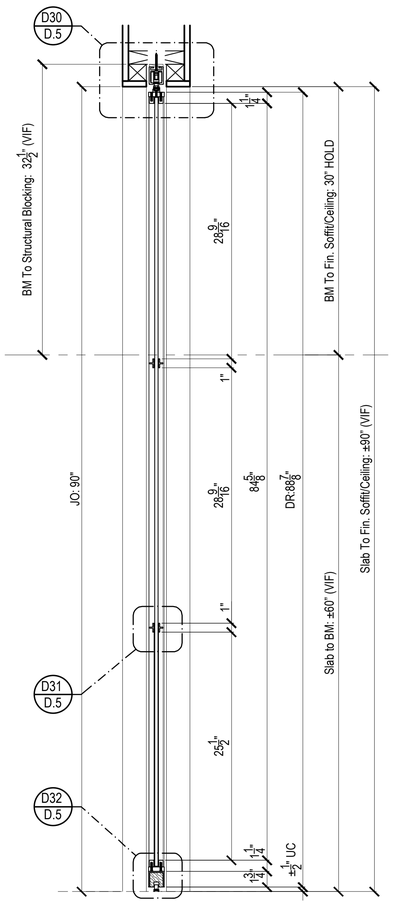

12 D.3 VERT. SECT.
SCALE: 1-1/2"=1'-0" N/A

☐ LEED ☐ FSC ☐ NAUF ☐ FIRE RATED

MATERIAL DESCRIPTIONS:

FINISH / WOOD SPECIES:	
F1	Blackened Acid Dip Finish Per Approved Sample
F2	Black
-	-
-	-
-	-
-	-

CORES / SUBSTRATES:	
C10A	1/8" HDF
C12G	11/16" PARTICLEBOARD
C12E	1/2" PARTICLEBOARD
C12H	3/4" PARTICLEBOARD
C12J	1" PARTICLEBOARD
C19E	1/2" PLYWOOD
-	-
-	-
-	-
-	-
-	-
-	-

SOLID HARDWOOD:	
-	-
-	-
-	-

DOOR SLAB ASSEMBLY:	
DS1	Metal Framed 1-3/4" Door with 1/2" Glass Light
DS2	Metal Framed 1-3/4" Sliding Door with 3/8" Glass Light
DS3	Metal Framed 2" Sliding Door with 3/8" Glass Light
-	-
-	-

OTHER MATERIAL (GLASS, STONE, METAL):	
M1	1/16" x 3/8" Black Foam Tape
M2	1/2" Clear Tempered Glass (Polished edges, & VHB Tape)
M3	20 Gauge Aluminum Panel Insert
M4	3/8" Clear Tempered Glass (Polished edges, & VHB Tape)
M9	1/32" x 1/2" 3M Clear VHB Tape
M10	1/4" Wide 3M Clear VHB Tape, 40mil Thick
M11	3M Dusted Crystal Film
M12	Rubber Glazing Gasket- Black
M13	1-1/4"x 3" Aluminum Tube Extrusion
M14	1/2" x 1/2"x 1/8" Aluminum Angle
M15	3/4" x 3/4"x 1/8" Aluminum Angle
M19	3"x 3 x 1/8" Aluminum Sq.Tube
M20	1/16" x 1/4" Clear VHB Tape
M21	1" x 1/2" "T" Metal Bar
M22	1" x 3/4" "T" Metal Bar
M23	1-3/4"x 6" Aluminum Tube Extrusion
-	-
-	-
-	-
-	-

HARDWARE:		FINISH:	QTY:
HS	See Door Hardware Schedule	-	-
-	-	-	-
-	-	-	-
-	-	-	-
-	-	-	-
-	-	-	-
-	-	-	-

BY OTHERS / EXCLUSIONS:			
E1	Slab	-	-
E2	Finished Floor	-	-
E3	Finished Wall	-	-
E4	Finished Ceiling	-	-

DATE:	ISSUED FOR:	BY:
6.21.19	Submittal	PD
-	-	-
-	-	-
-	-	-
-	-	-

VERDE

Demountable Wood & Glass Partition System
20 Haynes Court
Ronkonkoma, NY 11779
Tel: 631.981.2000 Fax: 631.981.2002

ARCHITECT:
Ampersand Architecture
648 Broadway, Suite 912
New York, NY 10012
t: 212.777.1276

CONTRACTOR:
-
-
-
-

PROJECT: OXO
601 West 26th Street
New York, NY 10001
9th Floor

DRAWING TITLE:
VERDE IndustrialSystem

DRAWN BY:	CHECKED BY:	SCALE:	DATE:
PD	-	AS NOTED	6.21.19

JOB NUMBER: VJ19072C
ITEM NUMBER: 1
JOB Barcode:
DRAWING NO. D.3

METAL | MDF | PARTICLE BOARD

‹ Wróć

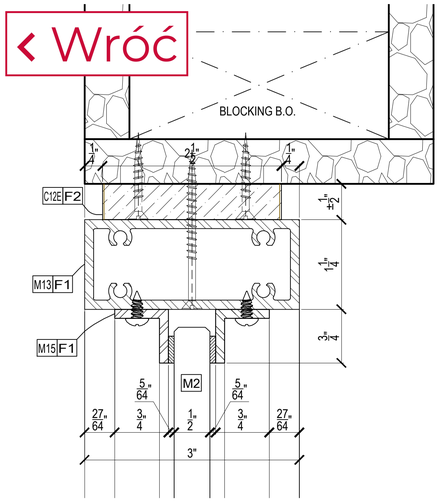

D15 / D.4 DETAIL
SCALE: 1'-0"=1'-0" REF: N/A

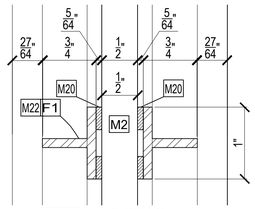

D16 / D.4 DETAIL
SCALE: 1'-0"=1'-0" REF: N/A

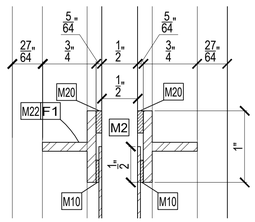

D17 / D.4 DETAIL
SCALE: 1'-0"=1'-0" REF: N/A

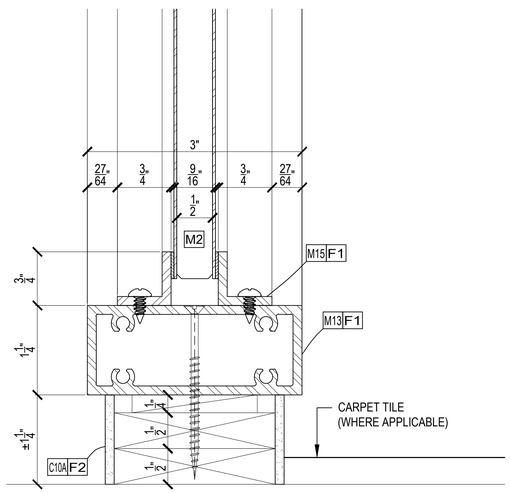

D18 / D.4 DETAIL
SCALE: 1'-0"=1'-0" REF: N/A

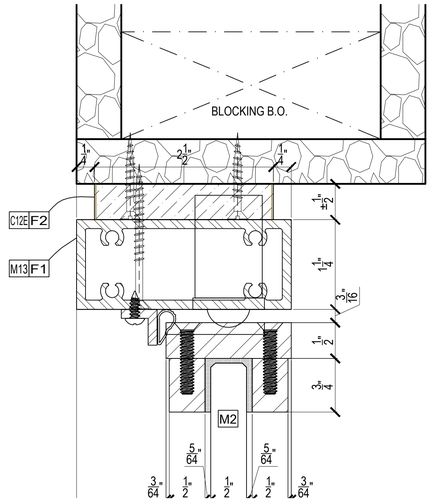

D19 / D.4 DETAIL
SCALE: 1'-0"=1'-0" REF: N/A

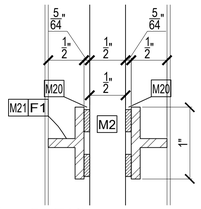

D20 / D.4 DETAIL
SCALE: 1'-0"=1'-0" REF: N/A

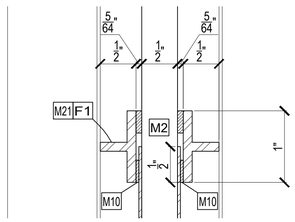

D21 / D.4 DETAIL
SCALE: 1'-0"=1'-0" REF: N/A

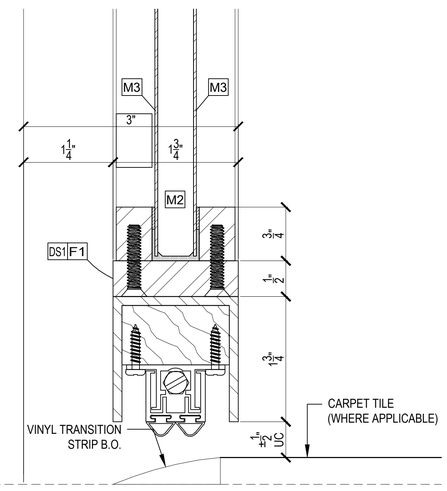

D22 / D.4 DETAIL
SCALE: 1'-0"=1'-0" REF: N/A

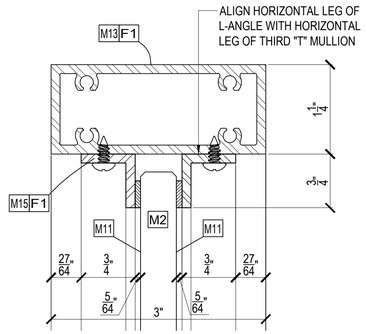

D23 / D.4 DETAIL
SCALE: 1'-0"=1'-0" REF: N/A

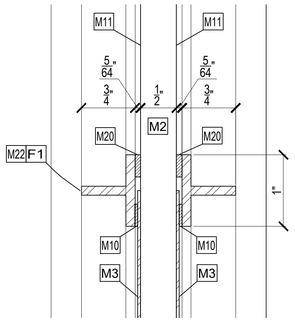

D24 / D.4 DETAIL
SCALE: 1'-0"=1'-0" REF: N/A

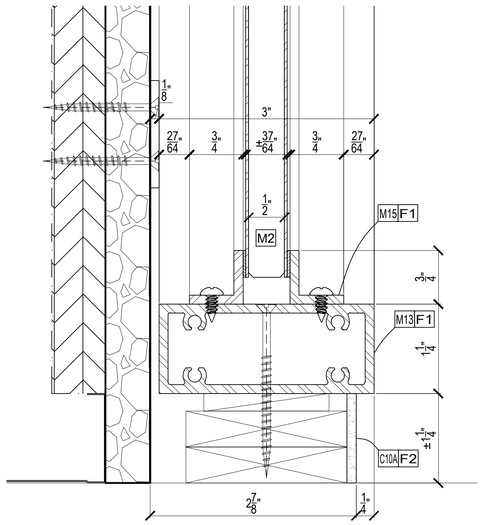

D25 / D.4 DETAIL
SCALE: 1'-0"=1'-0" REF: N/A

	METAL	
	MDF	
	PARTICLE BOARD	

☐ LEED ☐ FSC ☐ NAUF ☐ FIRE RATED

MATERIAL DESCRIPTIONS:

FINISH / WOOD SPECIES:

F1	Blackened Acid Dip Finish Per Approved Sample
F2	Black
-	-
-	-
-	-
-	-

CORES / SUBSTRATES:

C10A	1/8" HDF
C12G	11/16" PARTICLEBOARD
C12E	1/2" PARTICLEBOARD
C12H	3/4" PARTICLEBOARD
C12J	1" PARTICLEBOARD
C19E	1/2" PLYWOOD
-	-
-	-
-	-
-	-
-	-
-	-

SOLID HARDWOOD:

-	-
-	-
-	-

DOOR SLAB ASSEMBLY:

DS1	Metal Framed 1-3/4" Door with 1/2" Glass Light
DS2	Metal Framed 1-3/4" Sliding Door with 3/8" Glass Light
DS3	Metal Framed 2" Sliding Door with 3/8" Glass Light
-	-
-	-

OTHER MATERIAL (GLASS, STONE, METAL):

M1	1/16" x 3/8" Black Foam Tape
M2	1/2" Clear Tempered Glass (Polished edges, & VHB Tape)
M3	20 Gauge Aluminum Panel Insert
M4	3/8" Clear Tempered Glass (Polished edges, & VHB Tape)
M9	1/32" x 1/2" 3M Clear VHB Tape
M10	1/4" Wide 3M Clear VHB Tape, 40mil Thick
M11	3M Dusted Crystal Film
M12	Rubber Glazing Gasket- Black
M13	1-1/4"x 3" Aluminum Tube Extrusion
M14	1/2" x 1/2"x 1/8" Aluminum Angle
M15	3/4" x 3/4"x 1/8" Aluminum Angle
M19	3"x 3 x 1/8" Aluminum Sq.Tube
M20	1/16" x 1/4" Clear VHB Tape
M21	1" x 1/2" "T" Metal Bar
M22	1" x 3/4" "T" Metal Bar
M23	1-3/4"x 6" Aluminum Tube Extrusion
-	-
-	-
-	-
-	-

HARDWARE:		FINISH:	QTY:
HS	See Door Hardware Schedule	-	-
-	-	-	-
-	-	-	-
-	-	-	-
-	-	-	-
-	-	-	-
-	-	-	-

BY OTHERS / EXCLUSIONS:

E1	Slab	-	-
E2	Finished Floor	-	-
E3	Finished Wall	-	-
E4	Finished Ceiling	-	-

DATE:	ISSUED FOR:	BY:
6.21.19	Submittal	PD
-	-	-
-	-	-
-	-	-
-	-	-

VERDE

Demountable Wood & Glass Partition System
20 Haynes Court
Ronkonkoma, NY 11779
Tel: 631.981.2000 Fax: 631.981.2002

ARCHITECT:
Ampersand Architecture
648 Broadway, Suite 912
New York, NY 10012
t: 212.777.1276

CONTRACTOR:
-
-
-
-

PROJECT:
OXO
601 West 26th Street
New York, NY 10001
9th Floor

DRAWING TITLE:
VERDE IndustrialSystem

DRAWN BY:	CHECKED BY:	SCALE:	DATE:
PD	-	AS NOTED	6.21.19

JOB NUMBER: VJ19072C

ITEM NUMBER: 1

JOB Barcode:

DRAWING NO. D.4

Wróć

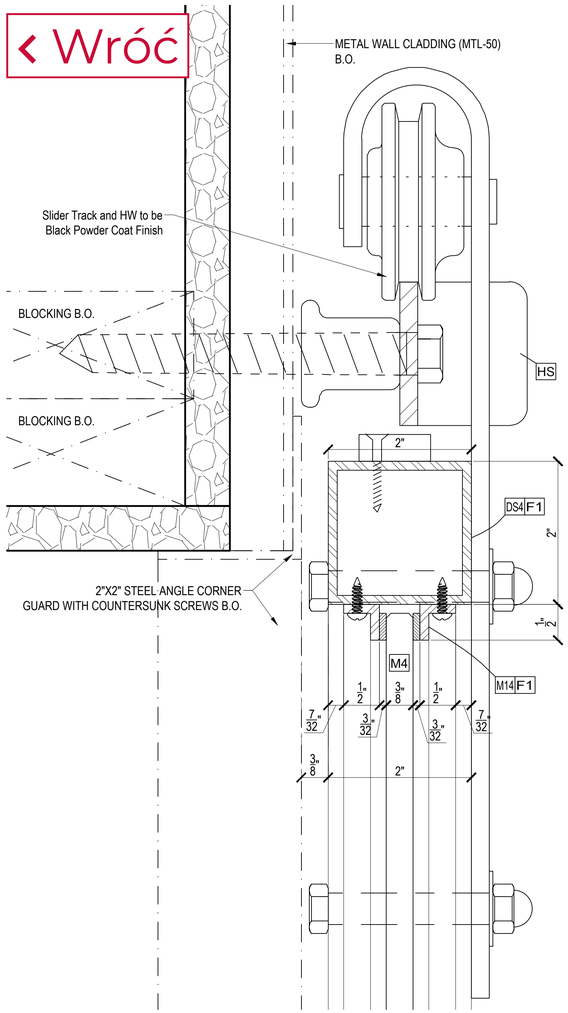

D26 / D.5 DETAIL
SCALE: 1'-0"=1'-0" REF: N/A

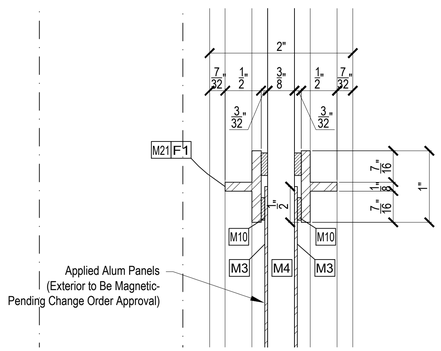

D28 / D.5 DETAIL
SCALE: 1'-0"=1'-0" REF: N/A

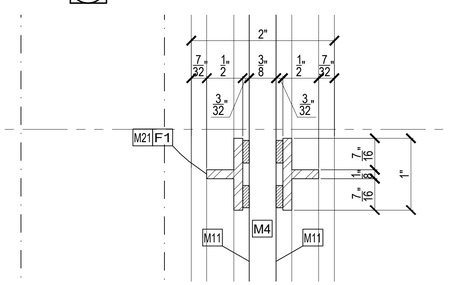

D27 / D.5 DETAIL
SCALE: 1'-0"=1'-0" REF: N/A

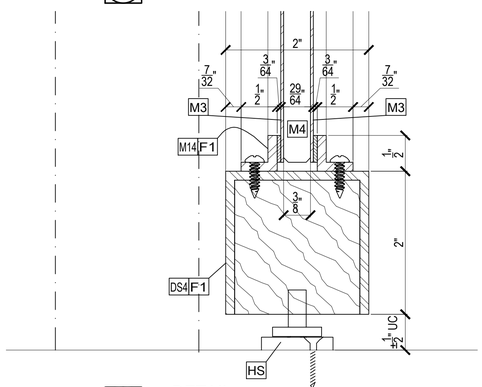

D29 / D.5 DETAIL
SCALE: 1'-0"=1'-0" REF: N/A

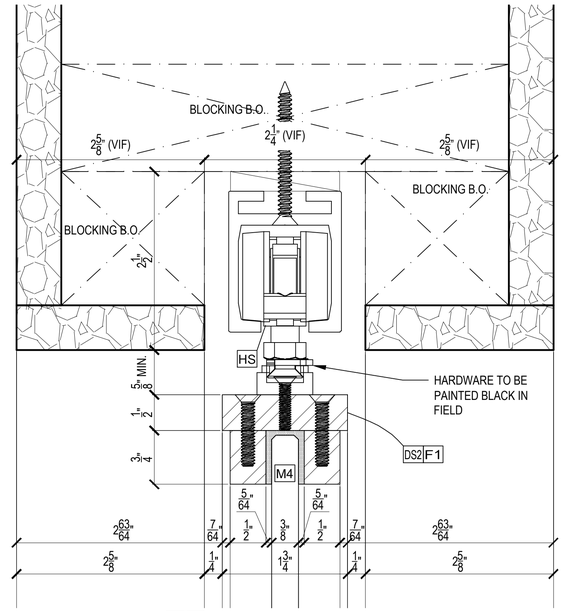

D30 / D.5 DETAIL
SCALE: 1'-0"=1'-0" REF: N/A

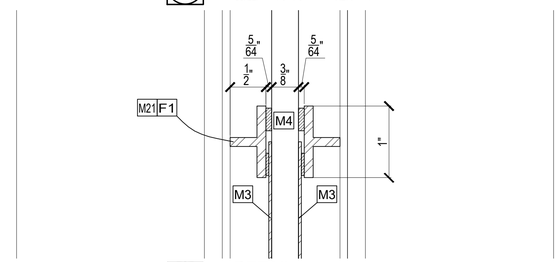

D31 / D.5 DETAIL
SCALE: 1'-0"=1'-0" REF: N/A

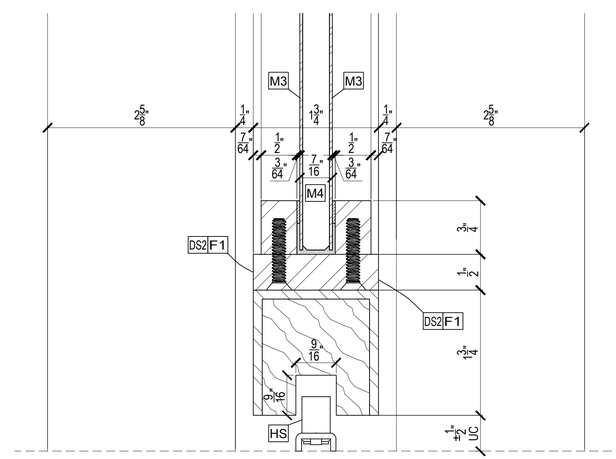

D32 / D.5 DETAIL
SCALE: 1'-0"=1'-0" REF: N/A

☐ LEED ☐ FSC ☐ NAUF ☐ FIRE RATED

MATERIAL DESCRIPTIONS:

FINISH / WOOD SPECIES:	
F1	Blackened Acid Dip Finish Per Approved Sample
F2	Black
-	-
-	-
-	-
-	-

CORES / SUBSTRATES:	
C10A	1/8" HDF
C12G	11/16" PARTICLEBOARD
C12E	1/2" PARTICLEBOARD
C12H	3/4" PARTICLEBOARD
C12J	1" PARTICLEBOARD
C19E	1/2" PLYWOOD
-	-
-	-
-	-
-	-
-	-
-	-

SOLID HARDWOOD:	
-	-
-	-
-	-

DOOR SLAB ASSEMBLY:	
DS1	Metal Framed 1-3/4" Door with 1/2" Glass Light
DS2	Metal Framed 1-3/4" Sliding Door with 3/8" Glass Light
DS3	Metal Framed 2" Sliding Door with 3/8" Glass Light
-	-
-	-

OTHER MATERIAL (GLASS, STONE, METAL):	
M1	1/16" x 3/8" Black Foam Tape
M2	1/2" Clear Tempered Glass (Polished edges, & VHB Tape)
M3	20 Gauge Aluminum Panel Insert
M4	3/8" Clear Tempered Glass (Polished edges, & VHB Tape)
M9	1/32" x 1/2" 3M Clear VHB Tape
M10	1/4" Wide 3M Clear VHB Tape, 40mil Thick
M11	3M Dusted Crystal Film
M12	Rubber Glazing Gasket- Black
M13	1-1/4"x 3" Aluminum Tube Extrusion
M14	1/2" x 1/2"x 1/8" Aluminum Angle
M15	3/4" x 3/4"x 1/8" Aluminum Angle
M19	3"x 3 x 1/8" Aluminum Sq.Tube
M20	1/16" x 1/4" Clear VHB Tape
M21	1" x 1/2" "T" Metal Bar
M22	1" x 3/4" "T" Metal Bar
M23	1-3/4"x 6" Aluminum Tube Extrusion
-	-
-	-
-	-
-	-

HARDWARE:		FINISH:	QTY:
HS	See Door Hardware Schedule	-	-
-	-	-	-
-	-	-	-
-	-	-	-
-	-	-	-
-	-	-	-
-	-	-	-

BY OTHERS / EXCLUSIONS:			
E1	Slab	-	-
E2	Finished Floor	-	-
E3	Finished Wall	-	-
E4	Finished Ceiling	-	-

DATE:	ISSUED FOR:	BY:
6.21.19	Submittal	PD
-	-	-
-	-	-
-	-	-
-	-	-

VERDE

Demountable Wood & Glass Partition System
20 Haynes Court
Ronkonkoma, NY 11779
Tel: 631.981.2000 Fax: 631.981.2002

ARCHITECT:
Ampersand Architecture
648 Broadway, Suite 912
New York, NY 10012
t: 212.777.1276

CONTRACTOR:
-
-
-
-

PROJECT: OXO
601 West 26th Street
New York, NY 10001
9th Floor

DRAWING TITLE: VERDE IndustrialSystem

DRAWN BY:	CHECKED BY:	SCALE:	DATE:
PD	-	AS NOTED	6.21.19

JOB NUMBER:	ITEM NUMBER:
VJ19072C	1

METAL	MDF	PARTICLE BOARD	JOB Barcode:	DRAWING NO.
				D.5